HEADQUARTERS, DEPARTMENT OF THE ARMY

FM 63-2

XX

DIVISION SUPPORT COMMAND, ARMORED, INFANTRY, and MECHANIZED INFANTRY DIVISIONS

DISTRIBUTION RESTRICTION: Approved for public release; distribution is unlimited.

Field Manual
No. 63-2

HEADQUARTERS
DEPARTMENT OF THE ARMY
Washington, DC, 20 May 1991

DIVISION SUPPORT COMMAND, ARMORED, INFANTRY, and MECHANIZED INFANTRY DIVISIONS

TABLE of CONTENTS

PAGE

Preface ii
Chapter 1. **Sustaining the Division** 1-1
Chapter 2. **Command and Control** 2-1
Chapter 3. **Division Materiel Management Center** 3-1
Chapter 4. **Communications** 4-1
Chapter 5. **Sustaining the Soldier** 5-1
Chapter 6. **Arming the Force** 6-1
Chapter 7. **Fueling the Force** 7-1
Chapter 8. **Fixing the Force** 8-1
Chapter 9. **Moving the Force** 9-1
Appendix A. **Rear Operations** A-1
Appendix B. **NBC Considerations** B-1
Appendix C. **Heavy/Light Mixes** C-1
Appendix D. **DISCOM Operations in LIC** D-1
Appendix E. **Sample Tactical SOP for the DISCOM Command Post** E-1
Appendix F. **Support for the Heavy/Light and Infantry Divisions** F-1
Glossary Glossary-1
References References-1
Index Index-1

DISTRIBUTION RESTRICTION: Approved for public release; distribution is unlimited.

***This publication supersedes FM 63-2, 21 Nov 83; FM 63-2-2, 29 Oct 85; and FM 63-22, 24 May 88.**

Preface

This manual provides information on the structure and operations of the division support command. It is primarily directed toward the commander and staff of the DISCOM in the armored, mechanized infantry, infantry (National Guard), and heavy/light divisions. The manual describes the support available through the division's own organizational resources and that support obtained from resources outside the division. It describes the functional procedures through which this support is provided to users. The text of this manual discusses the DISCOM (MSB and FSB structure) associated with the armored and mechanized divisions. Differences in organization and support requirements for the heavy/light and infantry divisions are discussed in Appendix F of this manual.

The manual is based on doctrine in FMs 100-5, 100-10, and 71-100. FM 100-5 is the Army's capstone doctrinal manual which outlines how the Army will fight the AirLand Battle. FM 100-10 is the Army's capstone CSS doctrinal manual. It provides an overview of the CSS system for supporting the Army in the field. FM 71-100 describes division operations. It assists the commander in planning and conducting combat operations.

The proponent of this publication is HQ TRADOC. Submit changes for improving this publication on DA Form 2028 (Recommended Changes to Publications and Blank Forms) and forward to Commander, US Army Combined Arms Support Command, ATTN: ATCL-CLD, Fort Lee, Virginia 23801-6000.

Unless otherwise stated, whenever the masculine gender is used, both men and women are included.

Chapter 1

Sustaining the Division

CONTENTS PAGE

DISCOM SUSTAINMENT MISSION 1-1
SUSTAINMENT PLANNING 1-2
SUSTAINMENT IMPERATIVES 1-2
DISCOM SUSTAINMENT ORGANIZATION 1-3
DEPLOYMENT OF DISCOM ELEMENTS 1-4
SUSTAINING THE OFFENSE 1-7
SUSTAINING THE DEFENSE 1-9
SUSTAINING THE DEEP ATTACK 1-9
SUSTAINING RETROGRADE OPERATIONS 1-10
NIGHT AND LIMITED VISIBILITY OPERATIONS 1-10

DISCOM SUSTAINMENT MISSION

The DISCOM provides division-level logistics and HSS to all organic and attached elements of the division. The COSCOM logistics task force operating in the division area will provide logistics to the nondivision units in the division area. The DISCOM commander is the principal logistics operator of the division. He exercises full command authority over all organic units of the support command. The division G4 has coordinating staff responsibility for logistics planning. He develops division-level plans, policies, and priorities. The relationship between the division G4 and the DISCOM commander must be extremely close because of the similarities of interests. The DISCOM support operations section and the MMC provide planning and coordination to ensure sustainment support for all division and attached units.

The DISCOM provides the following logistics and HSS:

- Support of Class I, II, III, IV, V, VI, VII, VIII, and IX supplies.
- Operation of ammunition transfer points within the division. (Under MOADS, the corps DS ammunition company operates the division rear ATP. See Chapter 6.)
- DS maintenance and reinforcing unit maintenance support for all common and missile materiel organic to the division, and AVIM support for all aviation materiel.
- Materiel (supply and maintenance) management for the division.
- Transport for personnel, supplies, and equipment to accomplish division logistics and administrative missions. Also provide supplemental ground transportation to support emergency requirements.
- Supervision and coordination of DISCOM transportation operations.
- ADP system software support for division logistics activities.
- Materiel salvage facilities.
- A limited capability to carry reserve supplies.
- Logistics information and advice to the division commander and his staff, except construction.
- Echelons I and II health service support to units assigned and attached to the division. This includes emergency medical care, advanced trauma management, and sick call. Also provided are intradivision ground evacuation, emergency dental care, and optometry support. In addition, direct support and unit-level medical maintenance are provided as well as coordination of Echelon III (corps) HSS.
- Planning, coordinating, and conducting rear operations within its assigned areas of responsibility.
- Receipt, storage, and distribution of unclassified maps.

The DISCOM is dependent on the following

- Corps transportation to bring supplies forward to

the DSA and BSAs (Class IV, V, and limited III).

- The division AB or corps medium helicopter units for airlift needed to support logistics requirements,
- Additional water support distribution,
- Nondivisional field service units for laundry, bath, clothing exchange, and graves registration services. (Only when there are no authorized organic augmentations.)
- Appropriate elements of the corps for financial, legal, personnel, and administrative services.
- Corps aeromedical evacuation units for aeromedical evacuation support.

SUSTAINMENT PLANNING

Sustainment planning begins with the commander's statement of his intent in conducting the battle. This planning is done concurrently with the development of the tactical plan. Coordination with the division G1/G4 ensures that the tactical schemes of maneuver and fire support are supportable. The ADC-S orchestrates this planning with the DISCOM commander and the division rear CP staff. In the brigade AO, the FSB works with the brigade S4 to plan sustainment.

Some of the critical factors to consider in support planning are –

- Mission.
- Number, types, and capabilities of support units and quantities of resources available. See Appendix C for discussion of heavy/light mixes.
- Commander's priorities for support.
- Consumption factors for planned operations.
- Critical weapon systems whose continuous operation is crucial to the success of the battle.
- Threat to CSS operations in the rear and forward areas.
- Major tactical contingencies requiring support. See Appendix D for the DISCOM support in LIC.
- Location of supporting and supported activities.
- Effects of terrain and weather on supported activities.
- Casualty estimates.
- Future operations.

In applying these factors, commanders and their planners should consider the following principles:

- Provide continuous and adequate support.
- Perform support functions as far forward as possible.
- Overcome interdiction and congestion by fully exploiting and controlling trucks, helicopters, and all other means of transportation.
- Support committed units by pushing support packages forward rather than by filling requisitions.
- Position logistics units and facilities to afford priority of support to the main effort of the operation.
- Plan in detail for the protection of support units. Emphasize self-protection and passive protective measures when planning.

SUSTAINMENT IMPERATIVES

The tenets of AirLand Battle doctrine – *initiative, agility, depth,* and *synchronization* — are basic to operational and tactical success on the battlefield. These tenets establish the framework for arranging sustainment. Sustainment must be carried out to assist the maneuver commander to attain those tenets. Sustainment then seeks to overcome the natural inhibiting effects of the logistics "tail." It also enables the maneuver commander to take advantage of opportunities to achieve tactical or operational advantage.

Sustaining the battle requires commanders and staffs to adhere to the sustainment imperatives. These imperatives are anticipation, integration, continuity, responsiveness, and improvisation.

ANTICIPATION

The agility of a force, its ability to seize and retain the initiative, and its ability to synchronize its activities in-depth all depend to a great extent on how well the DISCOM anticipates requirements. For the sustainment planner, anticipation means maintaining and accumulating those assets necessary to support

the commander's operation at decisive times and, places. Anticipation also demands that DISCOM planners be flexible enough to accommodate any likely operational or tactical contingency.

INTEGRATION

Neither tactical nor operational plans can succeed without fully integrated CSS. The commander must assure that his overall operation is supportable at every stage of its execution. DISCOM commanders must plan their own activities to give the operational commander the greatest possible freedom of action throughout the campaign or battle. They must be bold and innovative in their operational planning by supporting the combat force in doing more than the enemy thinks possible. In this regard, sustainment operations must also be thoroughly integrated into any deception plan.

CONTINUITY

Sustainment cannot be interrupted without directly diminishing the power of the combat force. Operating forces must receive continuous supply and services to sustain their fighting strength.

While operations and sustainment both vary in intensity, operations may enter inactive periods; sustainment does not. DISCOM planners and commanders must take advantage of every opportunity to increase sustainment capabilities. When the pace of combat activity diminishes, they must redirect their efforts to replenish the sustainment base while continuing support to combat units.

Continuity requires that the sustainment effort never becomes hostage to a single line or mode of support. Planners must anticipate the temporary or permanent losses to key ports, air heads, and LOC nodes. Planners may consider hedging through forward stockage, establishment of alternate facilities, or a combination of both. Since the price of such hedging is a reduction in current support, the commander must constantly balance that cost against the risk of interruption.

RESPONSIVENESS

In crisis or when fleeting opportunities arise, the sustainment system must react rapidly. Such quick reaction to increased demand is only possible with trained DISCOM units. Trained units respond on short notice and surge their support for brief periods.

Such efforts may temporarily upset the support system but are often necessary to winning. The mental and physical agility to cope with such requirements must be built into the sustainment system ahead of time. To accomplish this, commanders must have effective organization, careful planning, and solid training.

IMPROVISATION

No matter how carefully DISCOM commanders and planners try to anticipate events, unforeseen contingencies arise in every conflict. Enemy action, interruption to established systems, and natural disasters can all upset plans and require improvisation.

DISCOM planners have always had to improvise when responding to unanticipated emergencies. During these times, normal operating procedures normally cease. Unusual sources of supply and transportation are exploited and exceptional risks accepted.

Improvisation has long been one of the American soldiers' greatest strengths and is viewed as an advantage in meeting emergencies. Improvisation is not a substitute for anticipation but rather a necessary complement to it.

DISCOM SUSTAINMENT ORGANIZATION

The heavy division usually consists of six major subordinate commands. These commands are an aviation brigade, division artillery, DISCOM, and three maneuver brigades. To accomplish the logistics and HSS missions, DISCOM units deploy throughout the division area of operation.

DISCOM HHC

The DISCOM headquarters commands and controls organic and attached units of the DISCOM. It supervises and controls all division-level logistics and HSS operations. It also advises the division commander and staff concerning supply, maintenance, medical, transportation, and field services functions throughout the division.

The headquarters company is responsible for providing all necessary administrative, supply, maintenance, and field feeding support for the company and the DMMC. The headquarters company provides for billeting, training, discipline, and security in the company. It also provides internal supply, food service,

and unit maintenance for vehicles, generators, and construction equipment organic to the HHC and DMMC. It also provides administrative, food service, and water support to the division AMCO. Details on the HHC are in Chapter 2. The division rear CP and the DISCOM CP are collocated. The DISCOM provides supply, maintenance, and field service support to division rear CP personnel.

DMMC

The DMMC is the primary materiel managing element in the division. The center receives policy and operational guidance from the DISCOM commander and advises the commander on materiel (supply and maintenance, less medical) management. Activities include —

- Determining supply requirements.
- Ordering and directing the distribution of supplies received by the division (except Class VIII).
- Developing and supervising the division authorized stockage lists and the prescribed load lists.
- Maintaining the division property book and Army equipment status reporting data.
- Operating an integrated division maintenance management information program. The DMMC maintains maintenance status to include problems, maintenance requirements, and unit materiel readiness in the division.

Details on the DMMC are in Chapter 3.

AIRCRAFT MAINTENANCE COMPANY

The division aircraft maintenance company is organic to the DISCOM. This company provides AVIM support to the specific aircraft assigned to the division. The company provides responsive one-stop aircraft intermediate maintenance and supply support from its base location. It also provides maintenance support forward to aircraft operating units. The three forward support helicopter repair/recovery teams normally provide support forward. When required, additional aircraft component repairers are drawn from company resources and attached as needed to complete a specific mission. Each team supports a specific type of aircraft. There is one team for each of the following attack, utility, and observation. Further discussion of the AMCO is in Chapter 8.

MAIN SUPPORT BATTALION

The main support battalion is organic to the DISCOM. The battalion provides division-level logistics and health service support to division units located in the division rear. It also provides reinforcing support to the forward support battalions. A detailed description of the MSB's mission, organization, and functions is presented in FM 63-21.

FORWARD SUPPORT BATTALIONS

The forward support battalions are organic to the DISCOM. These units provide division-level logistics and HSS to the brigades and other division units located in the brigade areas. A detailed description of the FSB's mission, organization, and functions is presented in FM 63-20.

DEPLOYMENT OF DISCOM ELEMENTS

The mission is the basic consideration in the location of CSS units and their facilities. Maintenance, supply, and medical companies and other DISCOM units must be far enough forward to be appropriately responsive to the requirements of the supported units. Maintenance, for instance, takes place not only in the BSA but wherever the weapon system is located, if at all possible. Mechanics and mobile equipment must be there to fix or replace components of the weapon systems. Additional considerations are enemy capability and their proximity to support activities and other potential targets. Figures 1-1 and 1-2 show the deployment of DISCOM units as they may be throughout the DSA and BSA.

Brigade and division support areas normally locate toward the rear of the units they support. Considerations for support area locations are covered in Appendix A.

BRIGADE SUPPORT AREA

The brigade support area is that portion of the brigade rear occupied by the forward support battalion, the brigade rear CP, and other units shown in Figure 1-1. In those instances where the maneuver battalion trains are echeloned, the battalion field trains are included. The BSA is normally between the division support area and the battalion areas. The BSA is approximately 25-30 kilometers behind the FLOT. This provides protection against enemy indirect fire weapons.

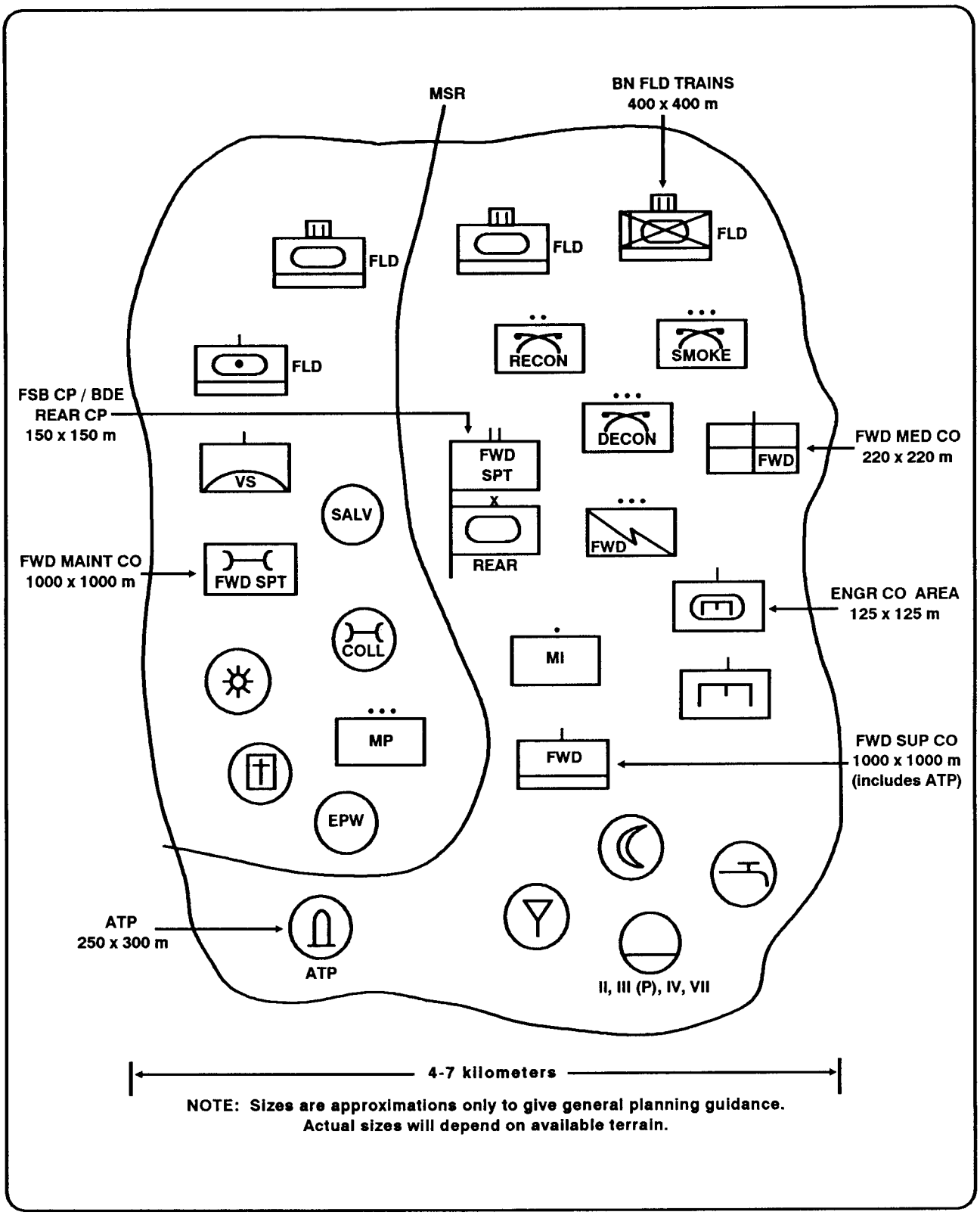

Figure 1-1. Sample BSA layout (division elements).

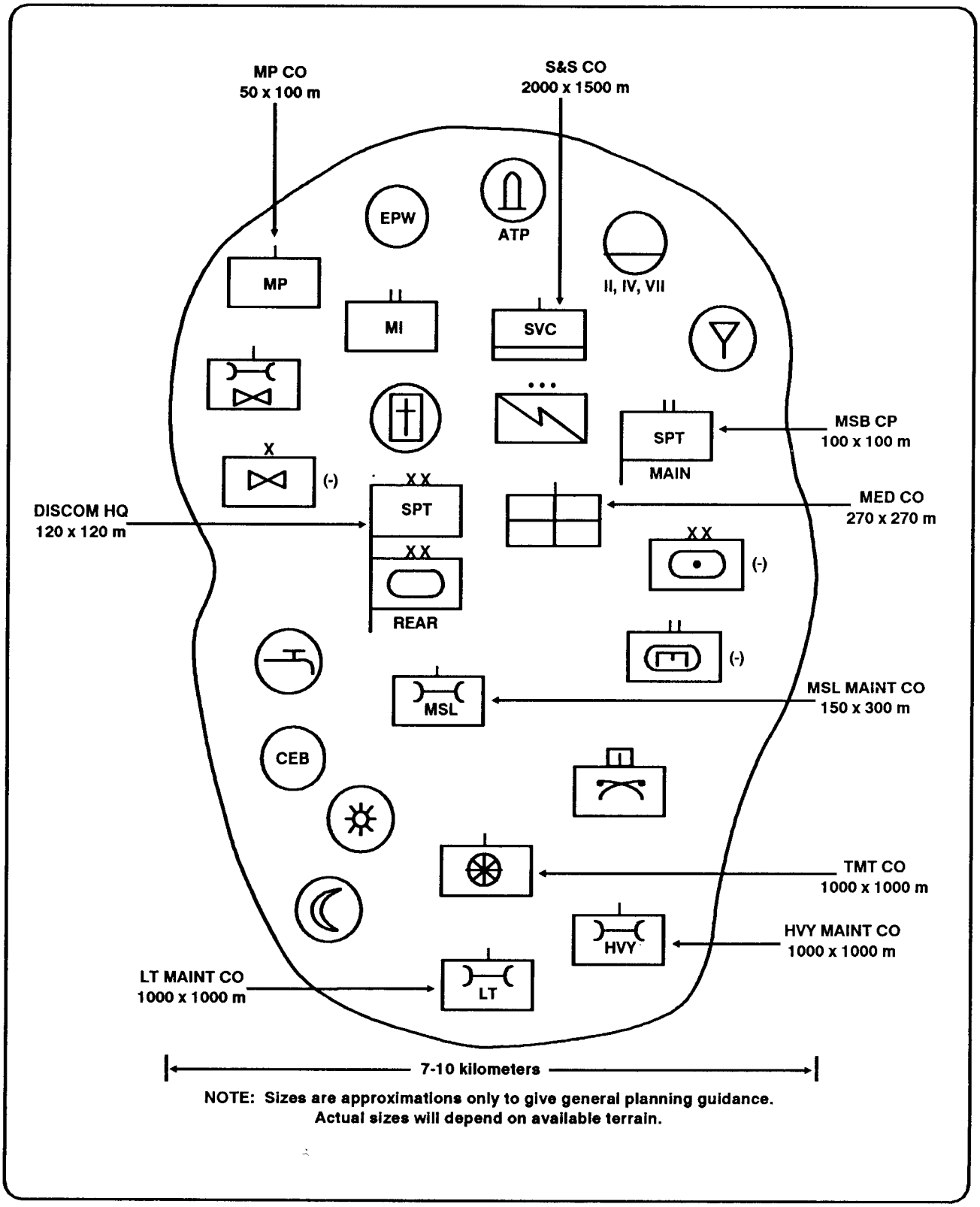

Figure 1-2. Sample DSA layout (division elements).

Figure 1-1 depicts units normally found in the BSA. Both division and corps units may locate within the BSA. Coordination for personnel and logistics support for the brigade is done in the BSA through the interface of the brigade S1, the S4, and the FSB. Direct coordination exists because the brigade rear CP collocates with the FSB TOC. The FSB commander is the BSA commander.

The commander must balance the need for security against the need for dispersion. Specific missions, condition of road nets, and disposition of other troops in the area influence the distance between troop units. It maybe necessary, because of terrain restrictions or a guerrilla threat, to limit dispersion of logistics facilities even when an NBC threat exists. NBC considerations are discussed in Appendix B. Ideally, logistics activities disperse far enough to avoid the destruction of more than one unit. However, too much dispersion tends to reduce operational efficiency. It also increases the vulnerability of logistics units to sabotage, pilferage, guerrilla attack, and enemy conventional attack. Defense measures should be taken to ensure the least interruption in support operations. All troops must know how to use the individual and crew-served weapons organic to their unit.

DIVISION SUPPORT AREA

The division support area is that portion of the division rear occupied by the DISCOM and division rear command posts and many of the units organic and attached to the DISCOM. See Figure 1-2. This area may also contain combat support units and COSCOM elements operating in support of the division. The DISCOM commander is the DSA commander. The division rear CP normally collocates with the DISCOM CP. This is done to help with coordination, share area communication assets, and draw life support and security.

The DSA is normally between the division rear boundary and the BSAs and next to air-landing facilities and the MSR. The precise location of the DSA is contingent on a number of factors. Some of the major factors are the tactical plans, the location of COSCOM installations, and the MSRs. The terrain in the area of operations, security, and access to lines of communication must also be considered.

Like units in the BSA, elements within a DSA are dispersed, and each element must be prepared to provide its own protection. Employment of passive defense measures, such as dispersion, movement, concealment, cover, camouflage, and deception, reduce detection. Unit SOPS should prescribe active and passive defense measures for personnel, materiel, and installations. Appendix A covers self-defense in detail.

DISCOM units in the DSA displace only as necessary to maintain continuous support to the division and for security reasons. If a move is necessary, the DISCOM commander recommends the new locations. This is done through the operations cell of the division rear CP. All DISCOM units in the division rear (except the AMCO) must be capable of moving every one to three days.

SUSTAINING THE OFFENSE

An offense may be launched at any time and with minimum advance warning. Therefore, sustainment planners must be continuously kept informed of operational plans and anticipate offensive operations even while supporting other types of operations.

PURPOSE OF THE OFFENSE

The primary purpose of the attack is to defeat enemy forces. The characteristics of the offense are surprise, concentration, speed, flexibility, and audacity. The attacker must be able to maneuver rapidly, penetrate deeply, and survive powerful counterfires. The attacker must also maintain the momentum until the objective is taken. If the momentum is not maintained, the enemy may recover from the shock of the first assault and mount a successful counterattack.

PHASES OF OFFENSIVE OPERATIONS

Effective logistics and HSS are essential in maintaining the momentum of the attack. DISCOM commanders must prepare and organize for an offensive operation much the same as maneuver commanders prepare and organize for an offensive operation. Determination of support requirements is influenced, in part, by the phase of offensive operation employed. There are five phases of major offensive operations that the DISCOM commander must consider. They are —

- Movement to contact.
- Hasty attack.
- Deliberate attack.

- Exploitation.
- Pursuit.

These phases are basically sequential. Any operation in progress, however, has the potential of developing into a more fluid type operation or into a defense. DISCOM commanders must consider potential change as they plan to support an offensive operation. The objective in supporting offensive operations is to maintain the momentum by supporting as far forward as possible.

SUSTAINMENT CONSIDERATIONS

In considering the attack, DISCOM elements ensure that all support equipment is ready and that supplies are best located for support. They also ensure that sufficient transportation is available to support the tactical and logistics plans. All logistics elements are informed of their responsibilities in the operation. Consideration must be given to the nature of offensive operations as it affects logistics operations. High fuel consumption may dictate making provisions to build quantities in parallel forward locations without signaling our intentions to the enemy. Ammunition expenditure is typically less in offensive operations. However, responsive support is especially critical and made more difficult by lengthening of supply lines and by critical requirements for user resupply vehicles to stay close to firing elements.

Class III and V are the most important supplies in the offense. However, consideration must be given to all classes, as well as operational procedures specifically medical and maintenance. Supplies must be provided when they are needed. Planning, coordination, communications, and above all, flexibility are key elements to consider. Forward support becomes even more important and increasingly difficult in the offense. Likewise, DISCOM planners have to coordinate preparations with deception plans to avoid giving away the element of surprise.

In addition to general considerations for offensive operations, DISCOM planners should consider some specific factors for each phase of offensive operation.

DISCOM considerations for a movement to contact include the following

- DISCOM supply elements top off supported forces before the movement begins.
- Only minimal resupply is conducted during the move.
- Ammunition expenditures are usually to be light.
- Repair requirements is less in most commodities, but relatively high for vehicles. FSBs may preplan maintenance collection points along the route to reduce recovery requirements.
- Field services, except GRREG, are suspended during the move.
- DISCOM planners must consider potential bypassed enemy elements. They must have the latest intelligence on the enemy situation.

Considerations for support of a hasty or deliberate attack are generally those listed above for offensive operations. Additional considerations include –

- ATPs are positioned as far forward as tactically viable if resupply is possible during the operation.
- DISCOM elements also place refueling assets forward when possible.
- Priority of support is to the main effort with plans made to support follow-on actions.
- Planners arrange to throughput obstacle-breeching and bridging materiel if required.

Considerations for support of an exploitation include —

- Support operations elements coordinate forward echelonment of support elements with the division and brigade rear CPs.
- They also coordinate with the rear CP for support from maneuver elements to keep ground LOCs open.
- Planners arrange for aerial resupply of critical items to the exploitation force securing deep objectives.

A pursuit depends on open and secure LOCs. Air resupply may be required. Other support considerations are as follows:

- Arrangements for air resupply of emergency ammunition and fuel should be made in advance.
- Medical elements must carefully plan and coordinate evacuation procedures for extended LOCs.
- Plans for the evacuation of disabled equipment are critical. Prearranged collection points may be required.

SUSTAINING THE DEFENSE

The primary purpose of division defensive operations is the defeat of an enemy attack. The defense must create conditions that permit the division to survive the initial shock of an attack. Emphasis with the defense is to halt the enemy, and then exploit the initiative and go on the offensive.

Defensive operations can take many forms. They may range from absolutely static to wholly dynamic. They may range from relying on firepower from fixed positions to depending on maneuver to disrupt and destroy the attacking force. Typically, divisions combine area defense to control, stop, or canalize the attacker with mobile defenses to strike and defeat the attacking force.

Sustainment considerations are significant for DISCOM units in support of defensive operations. Support of the defense has several characteristics:

- Supply activity is greatest in the preparation stage. Stockpiling should be far forward and at successive defensive positions. Many supplies– especially munitions and barrier material — will be positioned as far forward as possible. These assets should also have as much mobility as possible. This allows continuous support as combat power is shifted in response to enemy attacks.
- Stockage levels maybe two or three times normal amounts for defensive techniques such as stay-behind operations to create redundancy of cashes and needed equipment that cannot be readily resupplied.
- Positioning of facilities should be far enough in the rear to be out of the flow of battle and relatively secure. However, they should not be so far removed as to render the logistics effort less effective.
- Maintenance teams should be placed well forward to return the maximum number of weapon systems to the battle as soon as possible. Stay-behind forces may require unique support arrangements to insure equipment remains operational.
- Consider use of preplanned/preconfigured push packages of essential items in communications break down. Stay-behind forces will require large quantities (two or three times normal) of water, Class I, III, IV, V, VIII, IX, and batteries.

DISCOM units locate out of the reach of possible penetrations. Locations are protected, concealed, and serviced by good road nets. Units make maximum use of built-up areas. Dispersion is consistent with support requirements, control, and local security. Passive security measures are emphasized. CSS operations are routinely carried out at night.

SUSTAINING THE DEEP ATTACK

Division deep penetrations initially focus on interdicting or fighting second-echelon regiments of first-echelon divisions. The momentum then shifts to interdicting or fighting regimental-sized elements of second-echelon divisions.

Use of deep operations affects the closure time of follow-on elements. They also create windows of opportunity for destructive actions against leading elements of follow-on divisions before they close on defending brigades. Division areas of interest and operation extend far forward of the FLOT. This gives the division commander time to identify approaching enemy forces, assess his options, and execute operations accordingly.

The deep attack takes various forms. Some forms disrupt enemy forces in depth with fire. This delays the enemy arrival in the battle area and prevents him from interfering with friendly counterattack. Another form of deep attack is more complex and more difficult to achieve. This engages both firepower and maneuver forces whale continuing the close battle. It prevents the enemy from massing (depriving momentum) which subjects him to possible destruction. The last form of the deep attack destroys or neutralizes particular enemy threats or advantages.

Support considerations for the deep attack are based on projected mission time length. These considerations are as follows:

- Short-term, highly mobile missions into enemy territory are mission self-sufficient. The units carry what they need and must expect no resupply for the duration of the mission.
- Long-term, highly mobile missions into enemy territory must include the capability to provide

limited CSS. This is done by attaching highly mobile MSTs and health service support elements to the attack force. The use of predetermined air or ground rendezvous points allow evacuation of wounded and positioning of emergency supplies and equipment.

SUSTAINING RETROGRADE OPERATIONS

A retrograde operation is an organized movement to the rear or away from the enemy. Enemy action may force the operation or a higher headquarters may direct its execution. Retrograde operations gain time, avoid combat under unfavorable conditions, or draw the enemy into unfavorable positions. Well-planned, well-organized, and aggressively executed retrograde operations can inflict heavy damages to enemy troops and equipment. At the same time they continue to maintain the division's fighting integrity.

Retrograde operations fall into three different types:

- The delay is an operation in which the division under enemy pressure, trades space for time. At the same time, the division inflicts maximum damage on the enemy without becoming decisively engaged in combat.
- The withdrawal is an operation in which the division, in contact with the enemy, frees itself for a new mission.
- The retirement is an operation in which the division out of contact, moves away from the enemy.

Sustaining retrograde operations is particularly complex because of the many activities that may be taking place concurrently. Maneuver units at any given time may be defending, delaying, attacking, or withdrawing. All of these actions need support under the overall retrograde operation. Since the retrograde is basically a movement to the rear or away from the enemy, the following need consideration:

- Echelonment of DISCOM elements rearward.
- Limiting of supplies forward to only the most combat essential. Evacuate all other supplies and equipment early.
- Evacuation of supplies and equipment to planned fall-back points along the withdrawal routes.
- Planned destruction of all supplies and equipment, except Class VIII (refer to FM 8- 10), that cannot be evacuated.
- Emphasis to keep supply and evacuation routes open.
- Withdrawal of forward medical treatment units as early as possible.
- Early evacuation of patients. Develop alternate means of evacuation; use air evacuation.
- Evacuation of equipment for repair.
- Movement of all nonessential DISCOM units and facilities to the rear as early as possible.
- Performance of CSS functions at night and during other periods of limited visibility.

NIGHT AND LIMITED VISIBILITY OPERATIONS

DISCOM commanders must anticipate that at least 50 percent or more of their work will be done in darkness or under other limited visibility conditions. Noise and light discipline is a necessity when operating under these conditions. Noise and light discipline controls need to be outlined in unit SOPS. These controls need to be briefed to unit members on a regular basis. Additional considerations for these types of operations are —

- Use of appropriate civilian buildings which would reduce thermal signature.
- Use of light-proofed shelters, both large and small.
- Use of filtered lights.
- Use of night-vision devices.
- Use of chemical lights to light CPs or vehicles and use of chemical trip flares.
- Use of self-defense smoke and obscurants.

Chapter 2

Command and Control

CONTENTS PAGE

COMMAND AND CONTROL IN THE DISCOM 2-1
HHC/MMC RELATIONSHIPS 2-1
AUTOMATED SYSTEMS 2-8
COMMAND POST 2-8
DISCOMHHC ORGANIZATION AND FUNCTIONS 2-10

COMMAND AND CONTROL IN THE DISCOM

Command and control is the process that directs, coordinates, and controls the activities of military forces to accomplish their missions. For the DISCOM commander, the C2 function is a major challenge because of the dispersal of the DISCOM units over a large area of the battlefield. Through the C2 process, the DISCOM commander confirms the availability of logistics resources and institutes control procedures. This ensures that support is available in the right quantities, at the right place, and at the right time.

HHC/MMC RELATIONSHIPS

The HHC/MMC performs C2 functions through relationships with –

- Higher organizations.
- Supported organizations.
- Subordinate organizations.

The DISCOM commander's higher organizational relationships are with the division commander and staff. Relationships with supported units include those with maneuver brigades, AB, and DIVARTY. Subordinate relationships are with the MSB, FSB, AMCO, and MMC. These relationships are discussed below.

DISCOM COMMANDER AND DIVSION COMMANDER AND STAFF

The relationship between the DISCOM commander and the division staff is like that of any other subordinate commander and the division staff. The DISCOM commander is the principal logistics operator of the division. Because he executes a large part of the division support plan, both he and his staff must work closely with the G4 and the G4 staff. This coordination provides the best support possible to the division. This is done under the centralized control of the ADC-S, who is also the rear operations commander.

The division staff must recognize the command responsibility of the DISCOM commander. They should also be familiar with the special problems specific to the DISCOM due to the number and diversity of units. The DISCOM commander is responsible for providing advice to the division staff. This is usually done during the making of division-level tactical and logistics plans. The DISCOM commander helps set policies and priorities. The division G4 seeks this advice and ensures its consideration in the decision-making process.

DISCOM AND SUPPORTED DMSION UNITS

It is the responsibility of the DISCOM to anticipate future missions. This is done by understanding the division commander's intent and translating current developments into future requirements. It is essential that the DISCOM commander and staff develop a close relationship with supported units. This enables them to anticipate required changes to the DISCOM organization, employment, and operations. This close relationship with supported units helps planners integrate DISCOM operations with those of the supported forces.

Whale the DISCOM must anticipate needs, it is the responsibility of the supported units to submit logistics and HSS requirements to the DISCOM. This is done through designated unit logistics representatives directly to the DISCOM elements operating in the DSA and the BSA.

DISCOM and Maneuver Brigade

The supported brigade XO and S4 are the principal staff officers of the brigade commander concerned

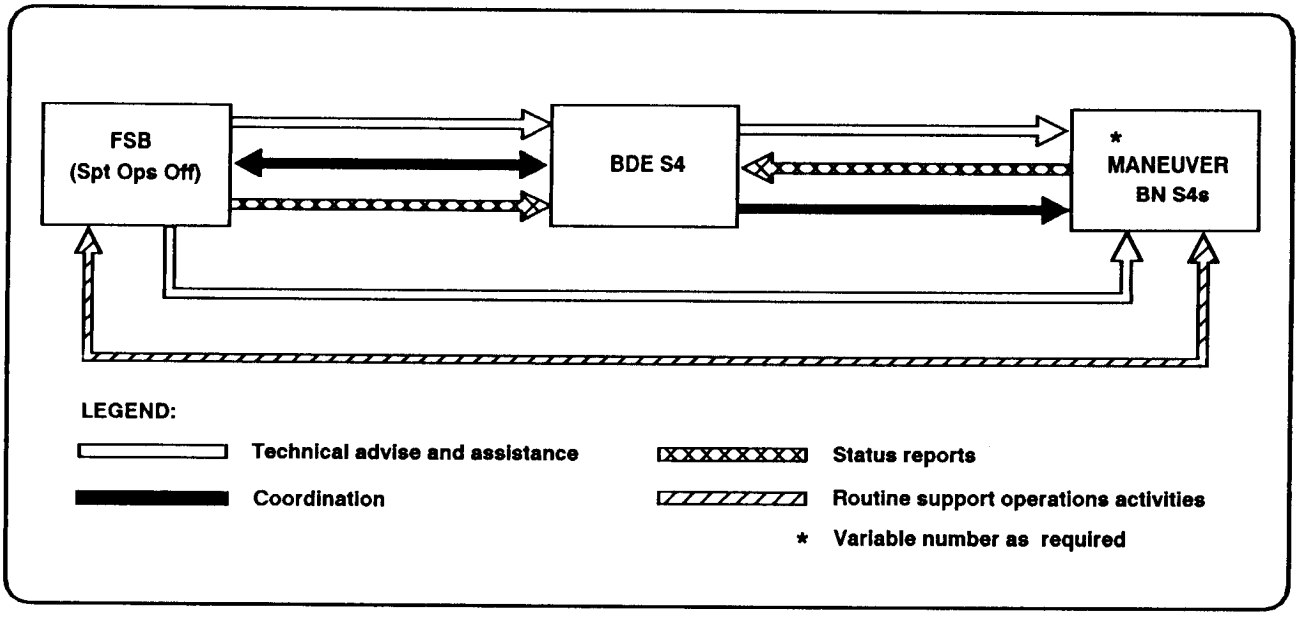

Figure 2-1. FSB relationships with brigade and maneuver battalions.

with matters of supply, maintenance, transportation, and field services. The FSB is in direct support of the brigade. The supported brigade S4 maintains close and continuous coordination with the FSB support operations officer. The FSB is responsible for providing support in accordance with the priorities and allocations established by the brigade commander.

The brigade XO and S4 can obtain technical advice and assistance from the FSB on how best to conduct logistics operations of the brigade. The battalion XOs and S4s and other unit logistics representatives in the brigade AO can also obtain technical advice and assistance in executing formulated plans and how best to operate within the brigade commander's established priorities.

The supported battalion S4s routinely deal directly with the FSB for support on a day-to-day basis. With their organic CSS assets, the supported maneuver battalions –

- Transport supplies from the FSB distribution points to the companies.
- Request supplies from the FSB.
- Perform unit maintenance (with the exception of medical equipment).
- Perform battlefield recovery.
- Perform unit-level HSS.

The battalion S4s are responsible for keeping the brigade S4 informed on the logistics status of the battalion. This keeps the brigade S4 current on the logistics posture of the brigade.

Figure 2-1 shows relationships of the FSB with the maneuver brigade and battalions.

DISCOM and Aviation Brigade

The AB XO or S4 coordinates with the DISCOM S2/S3 support operations branch for the logistics required from each FSB and the MSB. The DISCOM S2/S3 establishes an element to coordinate directly with the AB S4. This expedites support for the brigade. The most critical logistics functions for the AB are resupply of Class III and V, aircraft maintenance, and aircraft recovery and evacuation. To support the AB, the DISCOM –

- Provides division-level supply of Class I, II, III, IV, V, and IX (ground) at distribution points (MSB and FSB).
- Provides AVIM support to include storage, issue, and receipt of Class IX (air) repair parts for aircraft, avionics equipment, and aircraft armament systems (AMCO).
- Assists in aircraft recovery and evacuation, as required (AMCO).
- Provides conventional DS maintenance (MSB and FSB).

- Provides field services, when augmented by corps (MSB and FSB).
- Coordinates transportation requirements for providing CSS (DISCOM MCO).
- Provides unclassified map supply service (MSB and FSB).
- Provides salvage functions, except for COMSEC supplies, toxic agents, radioactive materials, aircraft, ammunition, explosives, and medical supplies (MSB and FSB).
- Provides division-level HSS on an area basis (MSB and FSB).
- Provides CSS advice and information to the AB commander (DISCOM commander/staff).
- Provides limited ability to carry reserve supplies (MSB and FSB).

The AB S1 and S4, under the direction of the AB XO, have overall responsibility for the AB CSS command and control. They process requests, reports, and problems that are forwarded from their AB elements. They deal routinely with the DISCOM for AB units. The AB units –

- Pick up supplies with organic transportation assets from distribution points and deliver to their units.
- Request supplies and support required.
- Perform aviation unit maintenance and maintain a day-to-day working relationship with AMCO.
- Perform battlefield recovery.
- Provide unit-level HSS.

The DISCOM provides the AB with AVIM support through the DISCOM aircraft maintenance company. This AVIM includes aircraft armament and avionics repair, aircraft repair parts supply, and reinforcing aircraft recovery and evacuation. The AMCO also operates an aviation RX point.

The aviation maintenance company is under the command and control of the DISCOM commander. It establishes a close working relationship with the AB commander and staff, as well as AB units. It operates in direct support of the AB. In this role, the AMCO –

- Responds directly to AB AVIM work load requirements.
- Coordinates with the AB and receives priorities of support from the AB.
- Establishes communications with the AB.
- Provides technical advice and assistance to the AB.

The AB S4 is the principal staff officer for the AB commander concerning aircraft maintenance. The AMCO production control officer provides advice and assistance to the AB S4 on a routine basis. The AB S4 is the aircraft maintenance planner. He maintains close and continuous coordination with the AMCO commander and the production control officer.

Technical advice and assistance are available to the AB S4 from the AMCO and DISCOM staff in planning the AVUM operations of the AB.

The AB AVUM units have a day-to-day working relationship with AMCO. They are also routinely responsible for keeping the AB S4 informed of their respective AVUM status. In this manner, the AB S4 is always aware of the aircraft maintenance posture of the AB. See Figure 2-2.

Unlike the maneuver brigades, the area of interest and the area of operations for the AB match that of the division. The AB employs its aviation assets throughout the division sector. Thus, AB elements require area support for CSS functions other than aviation maintenance while in support of the division scheme of maneuver. This requires close coordination between the DISCOM and the AB for support from the DISCOM units in the DSA and in the BSA. Usually, the AB HHC and combat aviation companies receive their support from the MSB in the DSA. The attack battalion receives support from the MSB (DSA) or from an FSB in a nearby BSA. The cavalry squadron usually receives its support from the closest FSB.

DISCOM and Division Artillery

The division artillery commander informs the DISCOM commander of his CSS needs. The main concern of the DISCOM for the DIVARTY is ammunition.

The DIVARTY commander must ensure that the DIVARTY S4 works closely with the division G3 and G4 for ammunition planning. (The division G3 and G4 coordinate division requirements with the division ammunition officer.) The DIVARTY commander must also ensure that the DIVARTY S4 works closely with the DISCOM support operations branch and DAO for receiving ammunition.

Like the AB, FA units deploy throughout the entire division sector. Division artilleries are organized and equipped to support the division. Their organization

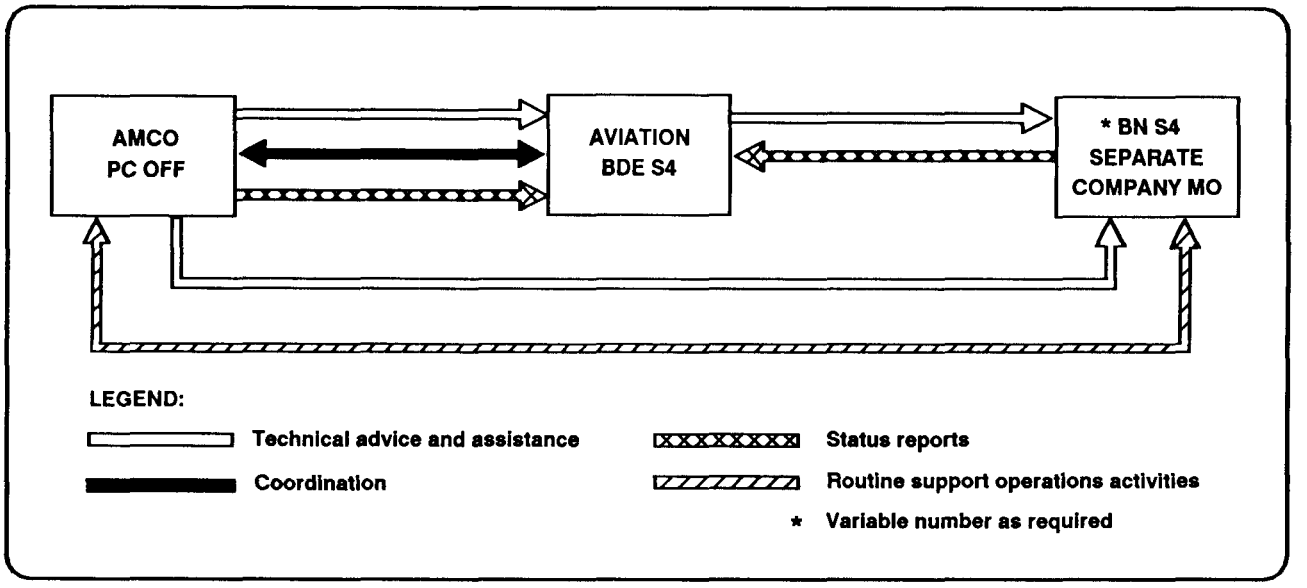

Figure 2-2. AMCO / AB relationships.

and equipment, therefore, vary with the type, mission, and organization of the division to be supported. Usually one FA battalion is placed in direct support of each maneuver brigade. This FA battalion receives its logistics from the FSB supporting the brigade. Additional FA units may reinforce these direct support battalions or provide general support for the division. The division commander must also consider the ammunition requirements of corps artillery units. These units provide fire support to the division. He will determine which nondivisional units will receive ammunition support from the ATPs based on recommendations of the DAO, G3, G4, and DIVARTY commander.

The DIVARTY S4 usually coordinates with the DISCOM S2/S3 support operations branch for the logistics required from each FSB and the MSB. Each FA battalion in DS of a maneuver brigade makes direct coordination with the designated FSB to implement the logistics plan.

CSS for FA battalions must remain timely and continuous. The control over the actual process is under the direct supervision of the battalion XO. The CSS personnel assisting the battalion XO are the S1, S3, S4, and the maintenance officer. Also assisting are the C-E staff officers and the medical section leaders. The S3 will establish the priorities for batteries and the ammunition RSR. The FA units –

- Pick up supplies.
- Request supplies and support required.
- Perform unit maintenance.
- Provide emergency medical treatment and coordinate medical evacuation support.
- Perform battlefield recovery.

DISCOM and Other Division Units

Direct support to other division troops in the division rear is provided by the MSB. The MSB and the DISCOM support operations officers work out the day-to-day details of logistics operations for division elements in the division rear with the unit logistics representatives. These include specific requirements and time schedules. However, for routine operations, the MSB companies also develop relationships with supported unit CSS operators. FM 63-21 has more details.

DISCOM AND CORPS

A number of corps elements are likely to be operating in the division area. These nondivisional units are typically supported by a logistics task force from the forward corps support group.

Liaison personnel from the forward corps support group normally collocate with the support operations section of the MSB and each FSB. These liaison personnel and the support battalion commander deter mine which method of support to employ for supporting corps units.

If the number of corps units needing support is limited and their presence does not create a significant

work load, then the MSB/FSBs may provide the necessary support to these units. The corps would provide additional assets to the MSB/FSBs when the logistics work load generated by sustaining corps units exceeds the capability of the MSB/FSBs. This ensures continued support to corps units operating in the area.

COSCOM assets need to be identfied before they are moved into the MSB/FSB areas to reinforce the support mission. Once identified, liaison personnel from the forward corps support group coordinate the move with the DISCOM headquarters and the MSB/FSBs. This coordination is necessary because the DISCOM and FSB commanders are the terrain managers for the DSA and BSA, respectively. Corps logistics units operating in the division area are under the command and control of the corps logistics task force. The rear CP must be informed of the arrival or departure of all nondivisional units into or out of the division rear area. The rear CP has the ultimate responsibility for terrain management, movement control, and security of all units in the division rear area.

The corps support group supports a division(s) with DS/GS ammunition and bulk fuel as part of the ammunition and bulk fuel distribution systems. The forward CSG with its logistics task force provides DS to corps units within its geographical area of responsibility. The subordinate battalions of the rear CSG, the medical brigade, and the transportation brigade have a major support mission. These functional battalions provide corps-wide transportation, supply (less Class VIII), GRREG, and airdrop services to the divisions, separate brigades, and ACRS. AVIM units support corps aviation assets. The large volume of supplies and materiel required to sustain the force and the number of casualties requiring medical evacuation dictate the establishment and maintenance of adequate lines of communication.

DISCOM COMMANDER AND MSB COMMANDER

The MSB commander –

- Assists the DISCOM commander in exercising technical supervision of logistics operations and training throughout the division.
- Advises and assists the DISCOM commander and staff and the DMMC in determining requirements for CSS.
- Represents the DISCOM commander in providing advice and assistance to the division commander and staff, when directed. Advice and assistance will center on the CSS operations for which the MSB is responsible.
- Provides a liaison element to the DISCOM staff, when required.

DISCOM COMMANDER AND FSB COMMANDERS

While the FSBs support the division maneuver brigades, they remain as subordinate units to the DISCOM. (See Figure 2-3). FSB commanders –

- Advise and assist the DISCOM commander and staff. They provide information on the status of CSS operations for which they are responsible.
- Provide support requirements for planning and executing future brigade support operations.
- Represent the DISCOM commander, when authorized, in planning CSS and provide advice to the brigade commanders and their staffs.

DISCOM COMMANDER AND AMCO COMMANDER

The AMCO provides AVIM support to the aviation brigade. However, it remains subordinate to the DISCOM. The AMCO commander –

- Advises and assists the DISCOM commander and staff by providing information on the status of AVIM.
- Provides AVIM requirements for planning and executing future AB operations.
- Represents the DISCOM commander, when authorized, by providing AVIM information and advice to the AB commander and staff.

DISCOM COMMANDER AND DMMC CHIEF

The DISCOM commander uses the DMMC as the primary materiel managing element. The DMMC chief is directly subordinate to, and receives policy and operational guidance from, the DISCOM commander. The DMMC chief advises the DISCOM commander on materiel (supply and maintenance, less medical) management activities.

DMMC CHIEF AND THE SUPPORT BATTALION AND AMCO COMMANDERS

The DMMC chief provides supply and maintenance management for the support battalion and AMCO

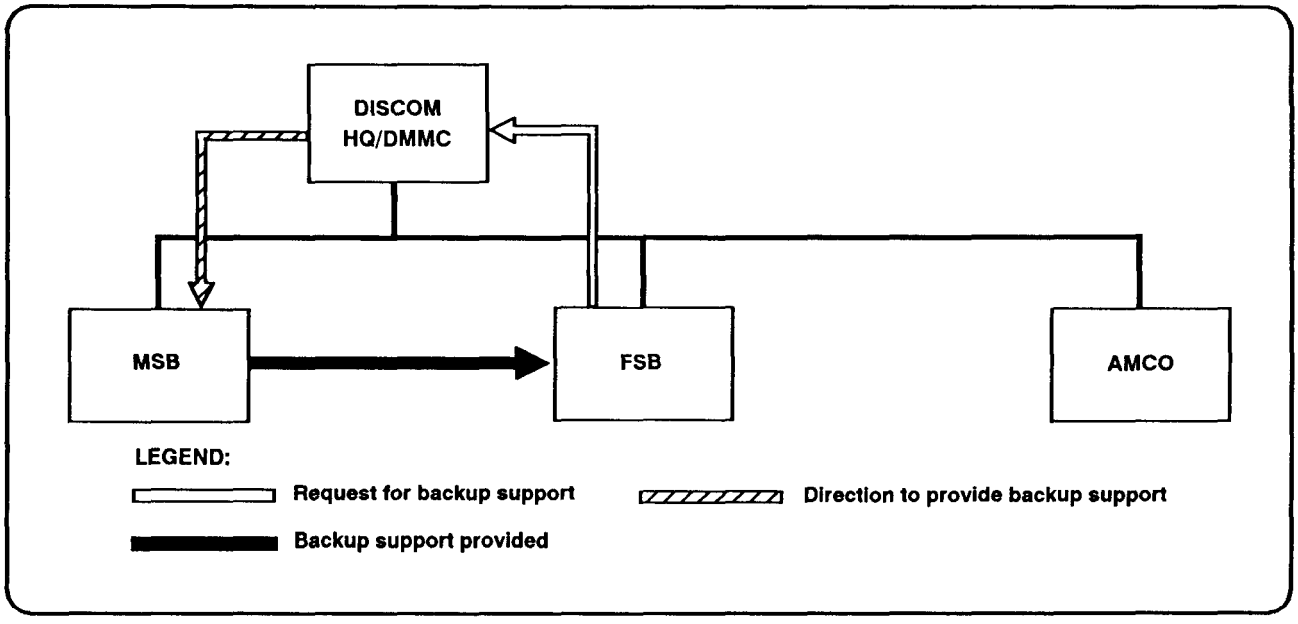

Figure 2-3. FSB/DISCOM HQ/MSB relationship.

commanders. The DMMC also determines the requirements for, procures, and manages distribution of supplies (except Class VIII). It develops and supervises ASLs. It maintains division property book and Army equipment status reporting data. It provides instructions for evacuation of items that cannot be repaired by direct support maintenance units.

Day-to-day technical supply direction is provided by the sections of the DMMC to the MSB, FSB, and AMCO. Current status information will be provided to the DMMC by these units on their day-to-day supply transactions. The DMMC also provides day-to-day Class IX technical direction to the maintenance units. Maintenance units return information to the DMMC on their day-to-day Class IX transactions.

AUTOMATED SYSTEMS

Automated systems throughout the DISCOM allow commanders to manage information and to optimize the use of limited resources. The systems include the machinery, programs, specialists, and organizations which process data through the use of computers.

CSS CONTROL SYSTEM

The CSSCS of the ATCCS provides the means to collect, analyze, and present accurate and timely data. This allows for the best decisions on the employment of limited logistics and medical support resources. It retrieves data from CSS functional systems (discussed later) and subordinate systems. One CSSCS device at the division level is in the DISCOM S2/S3 section. This device provides the interface between CCS2 nodes and CSSCS. Dissemination of information from the CCS2 is made through this device to its destination. OPLANs, OPORDs, and inquiries are examples of the information passed through this device. This device also assembles information for the DISCOM commander from subordinate units and systems. It assembles the information required to enter the CCS2 from the DISCOM data base and then transmits the information through the system. CSS information requirements between the division and corps flow directly from the DISCOM S2/S3 CSSCS to the COSCOM G3.

In the DMMC, the CSSCS interfaces with the supply, maintenance, transportation, and medical STAMISs. The CSSCS device in the headquarters of the MSB and in the headquarters section of the AMCO interface with STAMISs and update the DISCOM data base.

At the maneuver brigade level there are two CSSCS devices. The headquarters of the FSB has one device. This device responds to information requirements generated by the DISCOM commander and the maneuver brigade commander. The other CSSCS

device is in the maneuver brigade rear CP. This device enables the S1 and S4 to conduct planning for personnel and internal logistics operations. It also provides brigade personnel and logistics data to the maneuver brigade commander.

FUNCTIONAL LOGISTICS SUPPORT SYSTEMS

Several CSS STAMISs are employed within the DISCOM. These software systems operate on the TACCS or the ULC. Operator input transactions automatically update data within the files. Transactions are transmitted between systems either electronically or through the use of magnetic media. The systems used by the DISCOM and its subordinate units are discussed below.

SIDPERS operates on TACCS and automates strength accounting, assignment, organization record keeping, personnel record keeping and labor-intensive military personnel operations. This is done within the S1 section of the DISCOM headquarters, the S1 section of all subordinate battalion headquarters, and in the headquarters section of the AMCO.

SPBS-R automates the property accountability and reporting requirements of AR 710-2 and AR 710-3. It provides the DISCOM with a state-of-the-art automated property book that improves Class VII accountability and asset visibility. The SPBS-R operates on TACCS in the Class VII section of the DMMC. SPBS-R on TACCS interfaces with SARSS-1, ULLS, and CSSCS.

ULLS operates on the ULC. ULLS provides automation of logistics functions at the unit and battalion levels. ULLS then is employed throughout the division to include the DISCOM. ULLS interfaces with CSSCS, SARSS-1, SAMS-1, SPBS-R, and other applicable STAMISs.

SARSS operates on TACCS in the DISCOM. It consists of two parts, SARSS-1 and SARSS-2A:

- *SARSS-1* operates on TACCS in all division supply companies. It also operates in the division forward, light, missile, and aircraft maintenance companies. SARSS-1 automates Class II, III (packaged), IV, VII, and IX supply actions. It performs time-sensitive functions such as receipt, storage, issue, replenishment, inventory adjustments, supply performance reporting and excess identification. It also maintains accountable stock record balances. During normal operations, SARSS-1 interfaces directly with SARSS-2A on TACCS at the DMMC. In contingency operations, SARSS-1 can operate in the autonomous mode without SARSS-2A support. It can interface directly with the DAAS to route requisitions directly to these wholesale supply system. In addition to the SARSS-1 to SARSS-2A interface, SARSS-1 also interfaces with ULLS, SPBS-R, SAMS-1, DAMMS-R, and CSSCS.
- *SARSS-2A* is used in the DMMC. It is in the Class II-IV supply branch of the general supply section, repair parts branch of the materiel section, and requisition edit-document control branch of the property book and Class VII section. In these sections of the DMMC, SARSS-2A receives asset balance reports from SARSS-1 and routes unfilled requisitions received from subordinate SARSS-1 activities to the appropriate source of supply. Examples would be DAAS and the CMMC. It also performs lateral transfers, substitutes item identification release, and submits catalog changes to SARSS-1. It also maintains asset balance visibility for all SARSS-1 subordinate activities. SARSS-2A interfaces with subordinate SARSS-1, CSSCS, higher echelon SARSS-2A/2B, and other designated STAMISs. SARSS-2A will replace the DS4 run on the DAS-3.

SAMS operates on TACCS in the division and is comprised of two components, SAMS-1 and SAMS-2. SAMS provides the ability to present the status of equipment from the unit and DS maintenance shops to the materiel management levels:

- *SAMS-1* on TACCS is employed in all maintenance companies assigned to the FSB and MSB and to the aircraft maintenance company. SAMS-1 automates maintenance production control and provides immediate job order and backlog status information. It provides, through file inquiry, repair parts and shop asset status. It screens production parts requirements against on-hand assets and automatically generates, edits, and passes requests to the supply system via an interface with SARSS-1.
- *SAMS-2* on TACCS is employed in the MSB light maintenance company and in the DMMC materiel section. It receives SAMS-1 data and provides immediate production and supply

requirements to managers. It gives daily visibility of deadlined equipment. The materiel condition status report module displays parts required for production and readiness by either unit or weapon system. In addition to the SAMS-l interface, SAMS-2 interfaces with other appropriate SAMS-2 (for example, DMMC to CMMC), SAMS-3, and other designated STAMISs.

SAAS-DAO operates on TACCS and provides an automated management information system for the DAO section to support division ammunition requirements.

DAMMS-R operates on TACCS in the MCO assigned to the S2/S3 section of the DISCOM headquarters. It provides intransit cargo movements data, mode asset status, hold/diversion status, and movements information. It also provides transportation status reports, container reports, ETA forecasts, and transportation intelligence. MCO automated mission performance requires a DAMMS-R on TACCS interface with the HHD, MSB, as well as the TMT company DAMMS-R operations on ULC. Other interfaces with DAMMS-R are also maintained. Some examples of these interfaces are MCO to DTO and MCO to MCT on TACCS. Also it interfaces with SARSS-1, SAAS, CSSCS, and other designated automated systems.

TAMMIS-D operates on ATCCS and provides timely, accurate, and relevant information through the MEDPAR-D, MEDBLD, and MEDLOG-D subsystems. MEDPAR-D provides automated capabilities in treatment and disposition data, unit medical administration, ICRs, medical C2, and system setup/maintenance. There is also an ADTMC module that will assist the aidman in the proper treatment and disposition of disease cases. MEDLOG-D manages medical supplies, medical assemblages, and biomedical equipment maintenance. MEDBLD provides whole blood requirements for the division. MEDBLD operates at the DMOC and interfaces with medical companies, battalion aid stations, and corps medical units. MEDLOG-D operates at the DMSO, the medical companies, battalion aid stations, and MEDLOG battalion at corps level. MEDPAR-D operates at medical platoons and sections, medical companies, and the DMOC.

COMMAND POST

The dynamics of the modern battlefield – *speed, complexity,* and *lethality* – require the very highest level of organizational efficiency within the DISCOM CPs. Automated and manual information systems minimize the time required for administrative processing of information. They also ensure accurate portrayal of the tactical situation and prevent the needless verification of dates. They also make information immediately available to the commander and members of the staff.

During the course of combat operations, the DISCOM CP receives, analyzes, coordinates, and disseminates critical information. The DISCOM commander establishes procedures which clearly identify routine CP functions needed to support the operation. Also identified are those functions which need command approval. In all situations, the commander will be kept informed.

The DISCOM commander establishes priorities and defines the level of authority within CPs. The extent of operational authority given to members of the CP is based on the DISCOM commander's desires and the experience of the staff. The exact operational authority is established clearly in the SOP.

Staff responsibilities and interrelationships must be clearly defined in the SOP. Clear, well-defined staff functions and tasks enhance the DISCOM ability to perform during periods of stress. They also help in maintaining continuous operations for an extended time. A sample TSOP for the CP is shown in Appendix E.

It may become necessary to conduct continuous operations during high-intensity situations. When this happens, two duty shifts might be used to ensure the C2 function. All personnel must be available during high intensity situations. However, it is the off-duty personnel who maintain the vehicles and equipment, provide CP security, and rest. Table 2-1 gives an example of how a DISCOM staff could be organized into two shifts.

The DISCOM CP is formed from organic assets. It is typically staffed by personnel and equipment from the S2/S3 section, the DMMO, and the medical operations center office. These cells, located in the DISCOM CP, are the focal points for providing logistics and HSS to tactical units. The DISCOM CP keeps abreast of all support actions. This promotes effective redistribution of taskers, decision making, status reporting, and audit trail management.

Table 2-1. Example of a DISCOM organized for two shifts.

Personnel who typically occupy the command briefing tent:

GRADE	TITLE
COL	Commander
LTC	XO
SGM	CSM

Staff representatives as designated by the commander

Personnel who typically staff the S2/S3 plans/intelligence branch:

PEAK ACTIVITY		REDUCED ACTIVITY	
GRADE	TITLE	GRADE	TITLE
LTC	S2/S3	MAJ	Asst S2/S3
MAJ	*S1	SGM	Ops Sgt
MAJ	*S4	SFC	Admin Sp
MAJ	MCO	SFC	Mov Sp
CPT	Chem Off	SFC	NBC NCO
SGT	Intel Sgt	SSG	Intel Sgt
SP4	Clerk/RTO		

Personnel who typically staff the DMOC:

PEAK ACTIVITY		REDUCED ACTIVITY	
GRADE	TITLE	GRADE	TITLE
LTC	C, DMOC	CPT	Plans Off
MAJ	DISCOM Surg	SFC	Ops (Evac)
MAJ	Plans/Ops (Evac)	SFC	Ops (Plans)
MAJ	Health Svc Mat Off		
SGM	C, Ops Sgt	SGT	Clerk/RTO
MSG	Ops Sgt	CPL	Patient-Admin
SFC	Intel NCO		
SGT	Patient-Admin NCO		
CPL	Clerk/RTO		
CPL	Med Sp		

Personnel who typically staff the DMMO:

PEAK ACTIVITY		REDUCED ACTIVITY	
GRADE	TITLE	GRADE	TITLE
LTC	C, DMMO	MAJ	Asst DMMO
SGM	C, Mat Mgt Sgt	MSG	C, Sup Sgt
SGT	Admin Sp	SFC	Subs Sgt
PFC	Cbt Signaler	SFC	Petrl Sgt
MAJ	Sup Mgt Off	SSG	Mat Mgt Sgt
CPT	Subs Sup Off	MSG	C, Ammo
CPT	Petrl Off	SFC	Sup Acct Sgt
WO	Spt Sup Tech	CPT	Mat Con Off
MAJ	DAO	SFC	Armt Maint Sgt
MAJ	Sup Mgt Off	SFC	Maint Mgt
MAJ	Mat Mgt Off	SFC	Maint Sgt
CPT	Mat Off	SFC	Acft Mgr
CPT	Mat Off	SFC	Msl Maint Mgr
CPT	C-E Mat Off	SFC	Mat Mgr
CPT	Avn Mat Off		
CPT	Msl Mat Off		
WO	Spt Sup Tech		

LEGEND: * or representative

ESTABLISHMENT

A key consideration in determining the location of a CP is the ability of the site to provide for good communications with higher, lower, and adjacent organizations. The CP should be located near routes that allow relatively easy access into the area. Prominent terrain features or major road junctions should be avoided to prevent the enemy from readily determining the CP location.

When possible, the CP should be located in built-up areas. Barns, garages, and warehouses eliminate the need for extensive camouflage. Basements provide added protection from enemy fires. Covering windows and using basements enhance noise and light discipline. This also reduces electromagnetic signatures, and thus, the requirement to move as often.

When a built-up area is not available, the CP should be located on the reverse slope. This provides cover and concealment from both ground and air observation and fires. The ground must be firm enough to support vehicle traffic, have good drainage, and provide enough space to disperse vehicles.

The CP should be mobile and relocate often to enhance its survivability. Being a major source of

electromagnetic and infrared energy, its location can be freed and targeted easily. To eliminate any disruption in C2, the CP must displace by echelons. Once an interim operational capability is established at the new location, the remainder of the CP elements move.

DISPERSION

CPs can be organized in many different ways and still accomplish their missions. The description and diagram that follow show one way a DISCOM CP can be organized and deployed.

One alternative for a CP layout is applying a cellular CP concept. This cellular CP provides a much greater degree of survivability. It does this mainly through duplication of functions. Small cells reduce the electronic signature, allow for wide dispersion, and ease concealment.

The optimum tactical configuration of the CP requires as many radios as possible to be remoted from the CP, and antennae should be placed outside the CP.

DISCOM HHC ORGANIZATION AND FUNCTIONS

The DISCOM commander and staff are the division's logistics operators. See Figure 2-4 for the organization of the HHC. The DISCOM commander advises the rear operations commander, the division commander (as required), and the division staff on those logistics and medical matters pertaining to DISCOM operations. The DISCOM commander normally receives guidance and direction from the division commander through the rear operations commander.

The responsibility for logistics planning belongs to the division G4 staff. The DISCOM commander is tasked by the division commander to evaluate the logistics and medical supportability of future courses of division action. The DISCOM commander tasks and provides guidance to the DISCOM staff. The staff gives the alternatives and preferred solutions to the commander for a decision.

The DISCOM headquarters has the following responsibilities and functions:

- Commands and controls organic and attached units of the DISCOM. It also monitors the operations of other units within its area of responsibility.
- Supervises and controls all division-level logistics operations within the division.
- Advises the rear operations commander (ADC-S), division commander, and staff concerning supply, maintenance, transportation, field services, and food service operations throughout the division.
- Monitors operations to determine the proficiency of the DISCOM and attached units in the field.
- Organizes the movements of subordinate units within the division support area in accordance with tactical plans. This function requires coordination with the division rear CP concerning current and proposed locations and movement of all DISCOM and supported units.
- Trains personnel and units of the DISCOM.
- Coordinates and implements plans for assigned rear operations responsibilities in the division support area.
- Plans and executes augmentation procedures for subordinate units.

DISCOM COMMANDER

The DISCOM commander commands and controls organic and attached units of the DISCOM. He provides DISCOM elements with clear missions, taskings, and statement of his intent. He gives planning guidance to his staff. With information from his staff, he restates the mission in a clear, concise statement of tasks to be done and purpose to be achieved. He gives the staff specific courses of action to pursue and directs the S2/S3 to issue the warning order to DISCOM elements.

The DISCOM commander is responsible for all training of personnel and units of the DISCOM. Because of the wide range of skills found in the DISCOM and the need for expertise in training, certain division staff officers are responsible for technical training programs. These officers include the G1/AG, division surgeon, and division chaplain.

In carrying out his logistics and HSS responsibilities, the DISCOM commander –

- Advises the division commander and staff concerning supply, maintenance, transportation, HSS, and services.
- Supervises and controls division-level logistics and medical operations of the division.

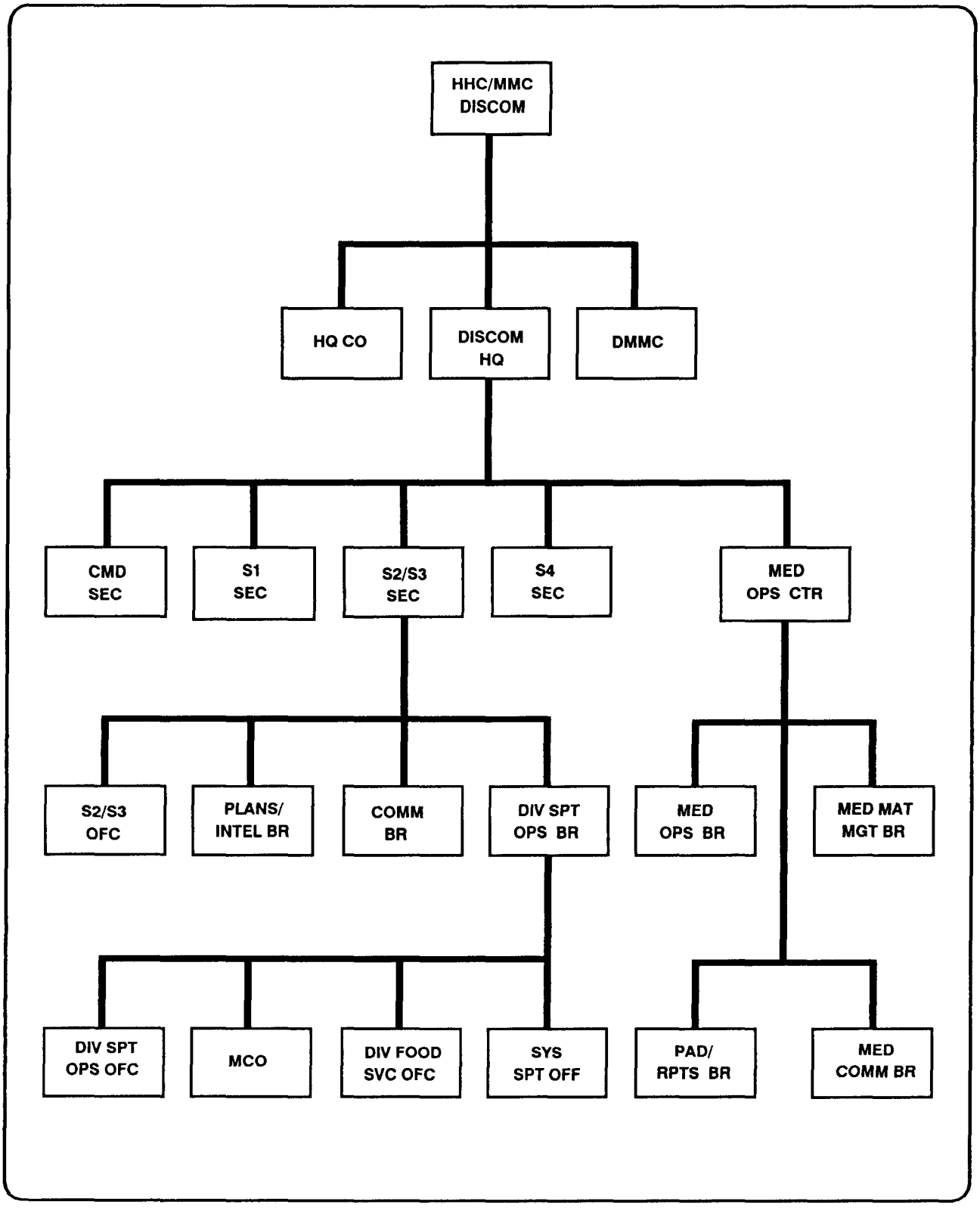

Figure 2-4. DISCOM HHC.

- Coordinates CSS operations and movements with the division rear operations commander and the division rear CP staff.
- Conducts inspections to determine the ability of the DISCOM and attached CSS units to function in the field.
- Makes sure that, in an allied environment, DISCOM operations comply with all applicable agreements and HNS commitments.

EXECUTIVE OFFICER

The executive officer is the principal assistant and advisor to the DISCOM commander. His functions are similar to those of a chief of staff as outlined in FM 101-5. As second in command, he should understand both the support operations and the non-CSS functions of the DISCOM. He supervises the DISCOM staff and coordinates assigned missions with subordinate unit commanders. In accordance with command directives, he formulates staff operating policies. He also oversees the maintenance of the master policy file and supervises LOC/TOC operations.

S1 SECTION

This section provides and coordinates PSS for the command. Support from organic assets include limited personnel and administrative services, legal service support, and religious support. Coordination with division and corps assets provides additional P&A and legal support as well as finance support. Postal services, morale and welfare activities support, and public affairs support are also provided. The S1 sect ion responsibilities include –

- Preparing the DISCOM personnel estimate.
- Preparing strength accounting reports.
- Preparing casualty reports.
- Conducting replacement operations.
- Developing casualty projections with special emphasis on critical low-density MOSS and nuclear and chemical weapons effects.
- Developing DISCOM personnel-related procedures for reconstitution.
- Processing personnel actions and reports.
- Developing procedures for emergency medical evacuation.
- Establishing and operating the EPW system within the DISCOM.
- Monitoring duty rosters.
- Monitoring legal support functions.
- Controlling the administrative publishing and the distributing of orders, directives, and forms originating at the DISCOM level.
- Maintaining close coordination with the DMOC, the WSM, and the S4.
- Providing personnel administration support normally performed at battalion level to the AMCO.

S2/S3 SECTION

The S2/S3 is the principal staff advisor to the DISCOM commander on military intelligence and counterintelligence, organization, training, communications, NBC matters, and CSS mission-related matters (except medical service support and personnel service support).

Plans/Intelligence Branch

The plans/intelligence branch has the following responsibilities and functions:

- Assists the commander in areas of intelligence, operations security, NBC defense, smoke and flame operations, rear operations, plans and orders, air defense, and defense against unconventional and psychological warfare operations.
- Determines DISCOM unit readiness and mission capability.
- Develops intelligence estimates.
- Develops, in coordination with the division rear CP, requirements for intelligence, NBC, smoke and flame, civil-military affairs, movement, air defense, engineering, security, and aviation support, and unit augmentation.
- Coordinates, plans, and requests fire support requirements with the division rear CP.
- Develops, coordinates, and integrates defense plans for all units located in the DSA.
- Monitors and updates intelligence information.
- Maintains logistics and tactical status, situation maps, reports, and journals, in coordination with other staff elements.
- Recommends task organization in coordination with the support operations branch.
- Monitors unit locations and coordinates relocation

of DSA or subordinate units out of the DSA wit h the division rear CP.

- Develops plans for the collection and dissemination of intelligence information.
- Disseminates intelligence information.
- Conducts logistics reconnaissance for DISCOM or for logistics unit movement.
- Coordinates counterintelligence with operations cell of the division rear CP.
- Coordinates unit movement with higher headquarters staff, adjacent and subordinate units, and other units in the division's area of operation.
- Prepares, coordinates, and authenticates operation estimates, OPLAN/OPORDs, annexes, and DISCOM SOPS.
- Prepares current and long-range contingency plans.
- Coordinates OPSEC program (S3). Plans physical security and CP access (S2).
- Coordinates EPW collection point operations with the G1 and PM representatives at the division rear CP.
- Develops administrative plans and coordinates logistics plans.
- Recommends priorities for allocating critical resources.
- Plans time-phased force development for support missions in coordination with the support operations branch.
- Coordinates and maintains LOC with all units in the DSA for rear operations.
- Plans, coordinates, and monitors DISCOM participation in civil-affairs activities.
- Orders, receives, stores, and distributes classified maps to subordinate units.

Division Support Operations Branch

The division support operations branch includes a division support operations office, a movement control office, a division food service office, and a system support office.

This branch ensures that supply, maintenance, transportation, and field services resources are used efficiently and effectively. The branch provides management support and direction to DISCOM assets responsible for providing logistics. Management includes planning, coordinating, and controlling the allocation and use of available resources to fulfill the commander's logistics requirements. The DISCOM commander is charged with providing logistics direction for the division. The DISCOM S2/S3 exercises this control through the division support operations branch. The division support operations branch –

- Maintains coordination with reinforcing maintenance units.
- Advises the DISCOM S2/S3 on problems affecting supply, maintenance, transportation, and field service operations.
- Recommends to the DISCOM S2/S3 the future allocation and location of logistics elements.
- Controls, through the MCO, the commitments of the transportation motor transport task vehicles for CSS within the division.
- Ensures that supply, maintenance, transportation, and field service SOPS are established.
- Ensures established movement priorities are followed.
- Plans, coordinates, and evaluates supply, maintenance, and field service operations.
- Prepares appropriate supply, maintenance, and field service directives. It also prepares operating orders for DISCOM operating elements based on information received from the DISCOM S2/S3.
- Coordinates, monitors, and informs division elements and attached units of the location of DISCOM support points.
- Recommends maintenance plans and policies.
- Coordinates and interfaces with the DMMC, ensuring that maintenance, supply, and transportation priorities are carried out.

Communications Branch

The communications branch provides C-E support within the DISCOM. This support includes fixed telecommunications systems as well as combat operations equipment. The communications branch –

- Plans and coordinates DISCOM C-E requirements and activities.

- Plans, directs, and monitors the operation and management of DISCOM field communications system.
- Determines capabilities and limitations of assigned C-E equipment as related to the tactical mission.
- Directs and controls the installation, operation, and maintenance of C-E equipment for all means of communications. It also advises commanders, staffs, and other interested parties on C-E/COMSEC requirements, capabilities, and operations.
- Assists in resolving maintenance problems within the DISCOM on assigned C-E equipment.

S4 SECTION

This section is responsible for all logistics matters pertaining to DISCOM units but is not concerned with division-level logistics. The S4 section –

- Reviews internal logistics status reports.
- Maintains the current status of the commander's critical list.
- Coordinates transportation requests for administrative moves.
- Submits requests for highway clearances.
- Assigns technical supervision over internal supply and maintenance procedures.
- Provides staff supervision and overall coordination for the DISCOM food service program.
- Monitors supply economy in subordinate units.

DIVISION MEDICAL OPERATIONS CENTER

The DMOC staff is responsible to the DISCOM commander for staff supervision of HSS within the DISCOM. The division surgeon exercises technical control of all medical activities within the division. The DMOC coordinates HSS in accordance with technical parameters established by the division surgeon. The DMOC, therefore, coordinates HSS with the division surgeon and other appropriate elements of the division coordinating staff. This is done in accordance with FM 101-5 and the division HSS SOP. The DMOC is responsible for monitoring division-level HSS and keeping the DISCOM commander informed on the status of HSS within the division. The division surgeon is informed of the DISCOM's HSS status through reports prescribed by the tactical SOP. The DMOC staff assists the division surgeon in planning and conducting division HSS operations. Specific functions of the DMOC include –

- Planning and ensuring that Echelon I and II HSS for the division are provided.
- Developing and maintaining the DISCOM medical troop basis, revising as required, to ensure optimum task organization for mission accomplishment.
- Planning and coordinating HSS operations of DISCOM organic medical assets and attached corps assets to include those attached for reinforcement and reconstitution.
- Prioritizing, in coordination with the DISCOM S3 and division surgeon, the reallocation of organic and corps medical augmentation assets to the division, as required by the tactical situation.
- Ensuring that the division HSS SOP is prepared and executed.
- Monitoring medical training and providing information to the division surgeon,
- Coordinating and prioritizing medical logistics and logistics aspects of blood management for the division.
- Coordinating medical intelligence activities to include collection, limited processing, and dissemination.
- Coordinating and directing patient evacuation from division-level medical facilities to corps-level medical facilities. This is done through the medical brigade or group medical regulating officer.
- Coordinating the movement of EPW casualties.
- Coordinating and managing the disposition of captured medical materiel.
- Planning, prioritizing, and coordinating preventive medicine missions, in conjunction with the division surgeon.

HEADQUARTERS COMPANY

The headquarters company provides the necessary administration, supply, unit maintenance, and field feeding to support unit operations. The company provides overhead and housekeeping support for the HHC and DMMC. The company is responsible for accountability of equipment assigned to the headquarters. It is responsible for command, control, and security of the company.

The headquarters company provides for billeting, training, discipline, and security in the company. It also

provides internal supply, food service, and unit-level maintenance for vehicles, generators, and construction equipment organic to the HHC and DMMC and the division rear CP. Some of the specific functions of the company are —

- The organic training, management, upkeep and accountability of supplies, equipment and human resources of the company.
- The installation, operation, and maintenance of basic wire, switchboard, and radio communications equipment systems of the company.
- The receiving storing, preparing, cooking, and serving of food for company and designated personnel, to include the AMCO.
- The management and distribution of all fuel for the company.
- The unit maintenance on the wheeled vehicles and trailers as well as internal combustion engines, power generation equipment and accessories, tactical utilities and precise power generation equipment, electric motors, and company-associated items.
- The coordination for recovery of disabled vehicles that are organic to the company.
- The requesting, receiving storing, issuing, accounting for, and preserving of the individual, organizational, installation, and expendable supplies and equipment authorized by company.

Chapter 3

Division Materiel Management Center

CONTENTS PAGE

MMC MISSION 3-1
MMC ORGANIZATION AND FUNCTIONS 3-1
WEAPON SYSTEMS MANAGER 3-7

MMC MISSION

The mission of the DMMC is to provide division units with centralized and integrated materiel management for Class I, II, III, IV, V, VII, and IX supplies and maintenance. Class II supplies include unclassified map supply and communications-security software aids. To accomplish its mission, the DMMC –

- Determines requirements for the development and technical supervision of division authorized stockage lists. Requirements are determined in accordance with AR 710-2, associated pamphlets, and the pertinent automated systems users manuals.
- Requisitions all authorized supplies needed by the division and manages their distribution upon receipt in the division area.
- Manages the division master property records. It establishes and maintains a centralized division property book for all divisional units.
- Manages maintenance work load of corps reinforcing maintenance units and MSTs in support of the division, when located in the division area.
- Manages the division Class IX (repair parts) supply system.
- Manages DISCOM maintenance operations.

MMC ORGANIZATION AND FUNCTIONS

The organization of the DMMC is shown in Figure 3-1. This center manages materiel of the division and advises the DISCOM commander and staff concerning supply and maintenance matters. It provides materiel management for weapon systems, implements maintenance priorities, and coordinates and controls supply functions to meet the operational need of the division.

DIVISION MATERIEL MANAGEMENT OFFICE

The division materiel management office is the supervisory element of the DMMC. This office plans, directs, and supervises the center's operations, administration, employment, training, and discipline. The following DISCOM functions are prescribed for the center:

- Ensuring that DISCOM SOPS contain uniform procedures for supply records and reports.
- Coordinating with the DISCOM S2/S3 on locations of supply distribution points.
- Coordinating with logistics operators on supply and maintenance matters in support of future operations.
- Providing supply management data to the DISCOM **S2/S3** in support of logistics operations.
- Preparing or reviewing and approving detailed plans and policies for supply and maintenance operations from a management point of view. This is done based on guidance received from the DISCOM commander and the G4.
- Maintaining, with ADP support, the division materiel management status profile.
- Providing continuous information in coordination with the DISCOM S2/S3 in support of DISCOM logistics operations.
- Advising the commander on the status of maintenance and repair parts.
- Directing and coordinating the technical assistance program.

LOGISTICS AUTOMATION SYSTEMS SUPPORT OFFICE

The LASSO provides data processing equipment and services for the DMMC. It also advises the DMMC chief and staff on ADP matters. It manages day-to-day automation operations of the DMMC.

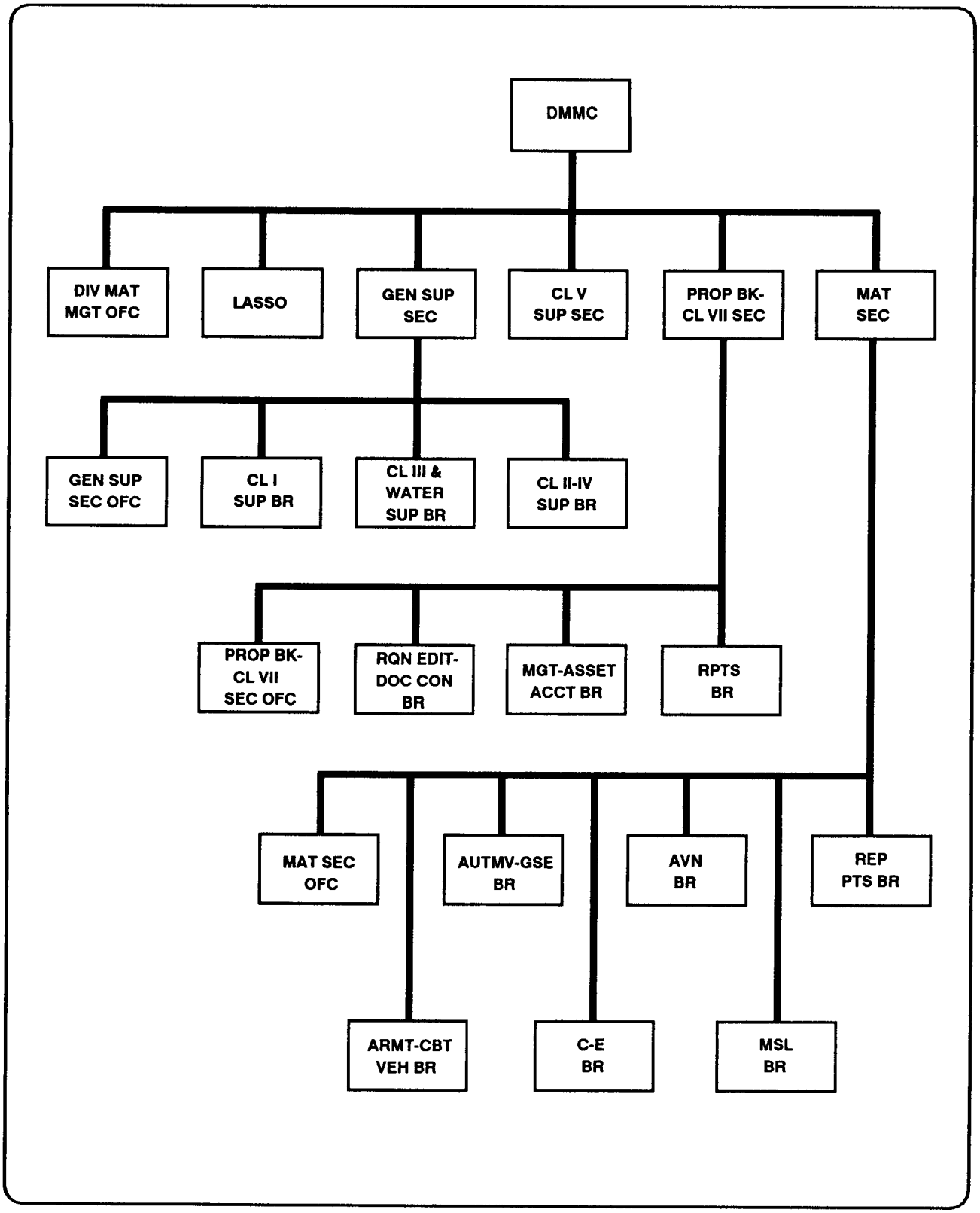

Figure 3-1. Division materiel management center.

The office is responsible for –

- Resolving systems problems and managing daily operations of the ADPE.
- Receiving, distributing, and controlling customer input and output to ensure proper processing in accordance with established procedures.
- Processing and controlling documents received from storage sites, support units, and DMMC elements.
- Maintaining the DAS-3 through the DS level.
- Performing data reduction and cycle breakdowns.
- Performing automatic data reduction for internally generated manager directions for issues, off-line receipts, local procurement actions, local catalog updates, inquiries, file changes, and post-post operations.
- Managing processed data and organizing and manipulating unprocessed data prior to processing.
- Performing service support functions which require distribution of incoming documents.
- Supporting and maintaining TACCS.
- Ensuring proper utilization of data processing equipment.
- Determining changes in processing as required.
- Verifying return data and maintaining hard-copy documentation of an audit nature required by AR 710-2.
- Transporting and receiving data and reports from the telecommunications center (transceiver site) and data processing detachment.
- Establishing and coordinating schedules of supply cycles with data processing operations personnel.

A system support element is being designed to replace the LASSO once the objective systems are fielded. It will provide support for logistics software packages run on microcomputers.

GENERAL SUPPLY SECTION

The general supply section coordinates and supervises supply management for water and Class I, II, III, and IV supplies in support of the division. The section does not manage classified maps, aircraft, airdrop equipment, or COMSEC equipment.

It determines requirements and recommends priorities, allocations, and other controls. It provides advice on the receipt, storage, and distribution of Class I, II, III, and IV supplies. It also establishes and maintains files of all supply publications and regulations required to support section activities. It also provides catalog research and retrieval service. It develops requirements for current and contingency operations. It also analyzes and assists in the development of the supply portion of logistics operations or administrative orders.

The general supply section consists of a general supply section office, a Class I supply branch, a Class II-IV supply branch, and a Class III and water supply branch,

General Supply Section Office

The general supply section office is responsible for planning directing and supervising the section operations. Specific duties center on the managing of Class I, II, III, and IV.

Class I Supply Branch

The Class I supply branch performs manual stock control of Class I supplies and the free issue of sundry items. It develops unit and division basic load data. The Class I supply branch plans and prepares for the procurement, receipt, accountability, storage, and issue of subsistence supplies. It plans, coordinates, and supervises the Army's subsistence supply system and is accountable for all Class I for the division.

Class II-IV Supply Branch

The Class II-IV supply branch performs automated stock control for expendable and durable division Class II, III (packaged), and IV items stocked and supplied by the operating units of the DISCOM. It manages and supervises Class II (including unclassified map supply) and IV expendable and durable items. The branch is responsible for all expendable Class II, III (packaged), and IV supplies in division ASLs.

The Class II-IV supply branch typically–

- Performs stock record functions pertaining to receipt, distribution, and issue of construction materials.
- Maintains accurate stock records and replenishment of ASL stockage.
- Manages the supply or replacement of mission support items and division special project items.
- Manages map ASL requirements for contingency operations and for current operations.

- Coordinates resupply of industrial gases.
- Provides liaison with the map supply point in the MSB.
- Is responsible for Defense Personnel Support Center related supplies and the supply of unclassified maps.

Class III and Water Supply Branch

The Class III and water supply branch controls and manages the supply of bulk fuel to division elements. It also determines requirements, recommends priorities, and manages allocations for bulk fuel. The branch also manages water distribution in an arid environment. Typically the branch –

- Directs the acquisition, storage, inspection, testing, issue, and distribution of bulk fuel.
- Directs preparation of reports and maintenance of records pertaining to bulk fuel accounting and distribution.
- Supervises the acquisition, storage, inspection, testing, issue, and distribution of water.

CLASS V SUPPLY SECTION

The Class V supply section maintains records of ammunition allocations, receipts, quantities on hand at ATPs, and expenditures for division units. It coordinates activities of ATPs and provides technical assistance and advice on ammunition management to division units.

Class V is one of the most critical classes of supply. These supplies must be provided at the right time and place to enable the division to win the battle. The Class V section of the DMMC keeps records on ammunition so that Class V supplies are available when and where needed. These records include allocations, credits, debits, and expenditures for all division units. They include basic loads, training ammunition, CSRs, RSRs, and other necessary data.

The Class V supply system is a continuous refill system. Stocks issued to the user are replaced by stocks moved up from the rear area.

The DAO serves as chief of the Class V supply section. The DAO is the division manager for ammunition. This officer provides assistance in all matters pertaining to ammunition support to the division. He also represents the DMMC and DISCOM commander on matters pertaining to ammunition requirements and availability. The DAO maintains liaison with the division G3 and G4 within limits defined by the DISCOM commander and the DMMC chief. On routine matters, the DAO usually deals directly with the G3 and G4, keeping the DMMC chief and the DISCOM commander informed. In cases having major impact on the DISCOM mission, the DAO obtains approval of the DISCOM commander and the DMMC chief before taking action.

The DAO coordinates and controls the use of Class V supplies for the division. He monitors required supply rates as provided by the G3. He enforces controlled supply rates determined by the G3 and G4. He also approves ammunition requirements for users. The DAO also provides staff coordination for the operation of the ATPs. This includes the DS ammunition company ATP operated by the corps DS ammunition supply company. He maintains liaison with the supporting ammunition supply points, the corps storage areas, and the COSCOM MMC.

For RSRs, the DAO provides technical advice concerning types, correct nomenclatures, and DODACs. Quantity requirements for RSRs are computed by the tactical commanders based on the tactical mission of the division. The G3 consolidates the RSRs. After approval of the G3, RSRs are forwarded through channels to the next higher command. The corps informs the division G4 and DISCOM commander of the approved supply rates received from higher headquarters and any CSRs imposed. The DAO then coordinates resupply in conformance with the CSRs.

The G3 and the DAO must also be informed of the corps artillery units RSR and CSR. These ammunition requirements must be incorporated into the fire support plans. These will also be used to determine the quantity of ammunition support required from the ATPs.

Specific duties of the Class V supply section are –

- Monitoring the safety, serviceability, maintenance, and security of ammunition assets in the division.
- Observing and assisting in investigations on ammunition malfunctions concerning division weapon systems.
- Providing liaison support to the explosive ordnance disposal team whenever EOD assistance is required.
- Providing technical assistance on ammunition supply, transportation, handling, and storage.
- Coordinating the operation of the ATPs and

controlling the issue of ammunition in the BSA and DSA.

- Ensuring that the ATPs do not have excessive numbers of vehicles or trailers loaded with ammunition.

PROPERTY BOOK-CLASS VII SECTION

The property book-Class VII section maintains the consolidated division property book. It also manages the Class VII items stocked and supplied by operating units of the DISCOM. It establishes working boundaries for the automated process and directs execution. It maintains division property books and transaction registers.

This section receives supply transaction documents and verifies, records, and processes data for the division property book. It manages the hand-receipt accounts and processes reports of survey and statements of charges. It assists in equipment status reporting. In addition, it manages division Class VII assets and Class II and IV nonexpendable supplies.

Property Book-Class VII Section Office

This office supervises and controls all input and output from automated processes supporting the property book system. The office also coordinates the supply transaction documents. It verifies, records, and processes data for the division property book.

Requisition Edit-Document Control Branch

This branch receives, records, and verifies data entered on supply transaction documents. This information is received as input for processing by the division's decentralized mobile computer. It also receives all printed listings and machine-produced cards as output from the LASSO. These are distributed within the division property book office and to units of the division. This branch controls all input and output from the automated processes which support the property book system. Once SPBS-R and SARSS-2A are fielded, the edit function will be performed automatically.

Management-Asset Accounting Branch

This branch manages the hand-receipt accounts for division units. It processes unit requests for issue and turn-in of organizational property and hand-receipt annex items. It also processes all data input to the division property book. It evaluates and acts on cards and listings produced as output from the computer. In addition, it identifies, reports, and makes recommendations on redistribution of excess property. The branch provides for seven property book teams. Each consists of a property book technician, a supply accounting sergeant, and two supply accounting specialists.

The branch also provides input to the G4 to develop Class VII requirements for contingency operations. This branch also assists in the development of the Class VII supply portions of administrative orders. It provides a catalog research and retrieval service. It coordinates the return to supply channels of excess end items as well as coordinates equipment processing with the FSBs and MSB.

Reports Branch

This branch processes reports of survey and statements of charges and similar documents. It assists in equipment status reporting. For more specific information on reports of survey see AR 735-5.

MATERIEL SECTION

The materiel section of the DMMC manages repair parts supply and maintenance. It designs and manages the division Class IX inventory and directs the Class IX issue. This section also requisitions supplies through the COSCOM MMC.

The materiel section manages Class IX supply and maintenance for all items of materiel, less medical and COMSEC. It oversees the document control and edit functions. This section supervises its branches in providing integrated materiel management on a materiel-systems basis using DS4 and SAMS procedures.

Its management is limited to the maintenance functions that are generally external to the MSB, FSBs, and AMCO. These include the monitoring of unit maintenance throughout the division. The section also collects, analyzes, and reports maintenance statistics and keeps records on the status of MWOs. It compiles reports on the operational status of division equipment and provides disposition instructions on unserviceable materiel.

One of its primary functions is to plan future maintenance requirements based on information from the DISCOM and division staffs. Maintenance management functions such as planning, scheduling, and supervising internal procedures and maintenance operations are the responsibility of the MSB and FSBs.

The section uses the SAMS as a tool for developing data and reports for maintenance management. The SAMS includes a maintenance control system and MWO accounting procedures, Data to support the SAMS are

provided from using organizations, maintenance units, and the US Army Materiel Command. The data are summarized and prepared in the form of reports. These reports are used for management purposes by supported units, maintenance unit commanders, the DMMC, and the DISCOM commander and staffs.

Each systems-oriented branch manages designated materiel systems end items and selected Class IX items that are critical or maintenance significant to the operational readiness of those systems. Each branch –

- Recommends maintenance data requirements and report formats.
- Implements ADP collection procedures and supervises the operation of the maintenance reporting system.
- Analyzes data and reports (automated and manual). This is done to recognize trends, problem areas, and any other data that create a need for action by the maintenance units and staff elements.
- Compiles special reports on the status of division equipment.
- Assists in developing policies and plans for controlling and managing data and reports and suggesting corrective actions.
- Provides disposition instructions for unserviceable items of equipment that exceed the repair ability or capacity of maintenance support units. This is done together with the property book-Class VII section. Working closely with the DISCOM movements control office, each branch develops transportation requirements for removing such items from the division area.
- Develops maintenance plans to support projected combat operations. This is done by coordinating with the maintenance units and staffs.
- Monitors unit maintenance operations and evaluates procedures and use of equipment and personnel.
- Maintains the status of all MWOs for equipment and recommends the order of completion for MWOs.
- Coordinates with other DMMC sections on the status of end item supply.
- Identifies materiel that needs calibration. It schedules calibration actions to be completed by TMDE support activities or TMDE maintenance battalions. It coordinates the calibration of division test, measurement, and diagnostic equipment by supporting the calibration activity.

The materiel section receives all repair parts supply requests from the DS units organic to the FSBs, the MSB, and the AMCO. The section assigns control numbers to the documents and maintains registers of such documents. It receives all machine-produced outputs (printed listings or punch cards) for distribution to the section's branches and to the DSUs. It also provides catalog research and retrieval service (using microfilm catalog data) and provides catalog changes to materiel managers.

Through its branches, the section serves as the centralized maintenance management activity for the division. Centralized management takes care of much of the effort related to, but not directly involved in, repair operations. The management effort mainly includes reporting, compiling, and interpreting data as a basis for management decisions.

Materiel Section Office

The materiel section office is responsible for supervision of repair parts supply and maintenance activities to include requisitioning supplies. It is responsible for managing repair parts supply requests and managing maintenance for all maintainable items of materiel. It is also accountable for Class IX supplies.

The office also supervises the preparation and maintenance of inventory reports and maintains stock locator records. It also verifies the accuracy of data entered on supply transaction documents prior to processing. This office is also responsible for overseeing the activities of all the branches.

Armament-Combat Vehicle Branch

The armament-combat vehicle branch performs integrated materiel management for armament (weapons) and combat vehicles. This includes artillery weapons, individual and crew-served weapons, common-type armament tools, and common-type armament tool and shop sets. The branch is responsible for the supervision of armament-combat vehicle maintenance activities. Key activities include the classification and diagnosis of malfunctions. They also include the repair and replacement of parts or the overhaul of components, the testing and final inspection of equipment.

Automotive-Ground Support Equipment Branch

The automotive-ground support equipment branch performs integrated materiel management for automotive and ground support equipment. This includes management for tactical wheeled and general purpose vehicles; construction and materials-handling equipment; and test equipment that is part of, or used with, assigned materiel. Key maintenance activities are the same as those listed above for the armament-combat vehicle branch.

Communications-Electronics Branch

The C-E branch performs integrated materiel management for communications equipment, communications-electronics intelligence equipment, and electronic warfare equipment. Also included are combat surveillance equipment, target acquisition equipment, and night vision equipment. This branch provides recommendations on employment of signal units based upon mission and equipment. It also supervises the unit maintenance of C-E equipment. It coordinates communications support to provide planning information and resolves communications-related problems. The branch also coordinates, organizes, and supervises subordinate personnel activities of units, shops, or activities engaged in maintenance, calibration, or installation of C-E equipment. This includes quality assurance.

Aviation Branch

The aviation branch performs materiel management for aeronautical and airdrop equipment and test equipment that is a part of, or used with, assigned materiel. Equipment includes materiel for aircraft and airdrop, avionics, aircraft armament, and related test equipment.

The branch supervises aviation maintenance activities. Key activities are the same as listed above, In the event of AVIM work overload, the branch along with the support operations branch coordinates passback to the COSCOM MMC. The branch supervises the maintenance of aircraft and applies production control principles and procedures to AVIM.

Missile Branch

The missile branch performs integrated materiel management for missiles, less the Class V portion of missiles that are managed by the DAO. Missile materiel includes rockets, guided missiles, ballistic missiles, and target missiles. Also included are missile-fire coordination equipment and related special purpose and multisystem test equipment. Test equipment which is part of or used with assigned materiel, missile launching and ground support equipment, and missile fire control equipment are also included. For these systems, the branch is responsible for the coordination of maintenance activities listed above.

Repair Parts Branch

The repair parts branch manages Class IX supply functions. It develops and controls overall ASL-PLL repair parts supply. It evaluates all ADP output pertaining to repair parts supply and provides advice to DSUs on catalog changes. This branch measures system performance through the use of appropriate management techniques and tools. These include pertinent records and reports such as stock status reports, the daily transaction register, and the input transaction and error listing. The branch determines, in coordination with the division G4 and the DISCOM (AMCO, FSB, and MSB) commanders, the wartime ASL load plan. The branch plans requirements and supervises input on requisitions. The branch also supervises the distribution and the accountability of repair parts, and maintenance-related supply items.

WEAPON SYSTEMS MANAGER

To support WSRO, a WSM is assigned at each level of command. This person is charged with weapon systems management. The WSM should have a logistics background. His primary skills should be in the areas of supply and maintenance management. A WSM must be aware of the commander's priorities for issue, He should also be aware of the unit's weapon systems shortages and the assets available to fill unit needs. The WSM's mission is to maximize the number of operational weapon systems available to the fighting forces.

The DISCOM commander usually assigns the ADMMO as the WSM for the division. The WSM interfaces with the division G1/AG for weapon systems personnel replacement. The DMMC Class VII supply technician serves as the point of contact in coordinating with the WSM for the delivery of weapon systems under WSRO doctrine.

The WSM must keep abreast of weapon systems status in the unit. He must also keep abreast of system crew members and equipment available or due in (including

estimated time of arrival). Some sources of personnel and equipment are new replacements, equipment returned from maintenance, and personnel returned to duty. The WSM coordinates closely with the materiel section in the DMMC. This is to vefify the status of weapon systems being repaired in maintenance units.

To ease the marrying of crew and equipment, the division G1/AG designates a person within the personnel management branch to be the WSM assistant. This person coordinates, manages, and provides crew and crew-member replacements. This assistant remains in the personnel management branch where all the loss and replacement data are maintained. The assistant reacts to the unit's critical shortages from strength reports to obtain replacements. Coordinating with the WSM, the assistant directs the crew or crew members to the link-up point where the WSM assigns the crew to a weapon system. When requested by the WSM, the assistant contacts the replacement detachment to place unit crew members on standby status. He may also arrange for crew members to bypass the link-up point and be sent directly to the unit. This situation usually occurs when personnel and equipment losses are low. Final assignment of personnel is based on priorities established by the commander. This coordination is conducted by personal visits or through the division area signal system. The WSM –

- Coordinates closely with the personnel management office (WSM assistant) to obtain crew replacements. Frequency of requests depends on the availability of weapon systems needing a crew or on weapon systems requiring crew-member support to make a system ready to fight.
- Reconciles, by brigades, shortages in each battalion as reported by the weapon system status report and by the situation report.
- Coordinates with the materiel officer to obtain the number of weapon systems in maintenance units and the number of crew members performing maintenance support to make systems ready to fight.
- Coordinates with property book and Class VII supply personnel to obtain weapon system status. Monitors the number of weapon systems available for issue and due in from Class VII supply or repaired weapon systems due in from maintenance sources.
- Coordinates with the MSB to move weapon systems with heavy equipment transporters.
- Directs "quick fixes," using available surviving assets, weapon systems, and crew members. This maximizes the use of ready-to-fight weapons where commander's priorities dictate.
- Coordinates with the WSM assistant and the MCO for movement of available partial crews to the link-up point. Here the partial crews will assist maintenance elements in making weapon systems ready to fight. Crews are formed by the WSM assistant using individual, partial-crew, or full-crew replacements. Crews may drive the weapon systems to the unit or accompany the weapon systems on an HET. The WSM/DMMO is responsible for ensuring that all BII and associated items (radios, machine guns) are married to end items and crews. The crew will fuel and arm weapon systems from supplies provided by the MSB/DISCOM.
- Alerts the MSB and the division G1/AG when weapon systems are arriving in the division area.
- Alerts the brigade and FSB when weapon systems are being transported to the unit.
- Allocates weapon systems to the unit based on the commander's priorities. Obtains instructions to move weapon systems forward to the unit based on the tactical situation.

Chapter 4

Communications

CONTENTS PAGE

PRINCIPLES AND DEVELOPMENTS IN COMMUNICATIONS SYSTEMS ..., ...4-1
CURRENT AREA SYSTEM 4-1
MOBILE SUBSCRIBER EQUIPMENT AREA COMMUNICATIONS SYSTEM 4-3
COMBAT NET RADIO SYSTEM 4-10
DISCOM HHC/DMMC RADIO NETS 4-10
COMSEC 4-14
OPSEC 4-16
AUTOMATION SYSTEMS SECURITY 4-17

PRINCIPLES AND DEVELOPMENTS IN COMMUNICATIONS SYSTEMS

Communications are essential for gathering data and planning operations and supervising performance. Communications are also essential for performing C2 functions. Effective management of DISCOM functions depends on adequate communications to keep abreast of changing situations and requirements.

The DISCOM relies on its organic communications assets and the division signal battalion for communications support. A large number of units operate in the DSA. This density factor may require support units to find alternate methods for communication. The length of transmissions and the accuracy with which they are sent directly affect the support mission. CSS planners should consider using couriers and wire communications as alternatives for getting the support mission done. These alternatives lessen the security risk of substantial radio use.

Communications equipment and systems in the corps and division are changing. The current area communications system is described below. This system will be replaced by the MSE system. Current FM (AN/VRC-12 series) radios and AM (AN/GRC-106) radios will be replaced by the SINCGARS and the improved high frequency radios.

These changes will affect the DISCOM in the area of connectivity to the area system. The command operations company of the division signal battalion installs, operates, and maintains the automatic telephone and switchboard facilities for access to the area system. The company also installs and maintains local subscriber circuits. Under MSE, DISCOM personnel will run wire from unit locations to the MSE interface point. The amount of wire needed is based on the dispersion requirements of the particular situation.

With the deployment of MSE, the wire-laying for all units will have to be covered by unit SOP. It must cover who does it and in what priority, The actual communications means will remain essentially the same. The DISCOM will depend on combat net radios and wire to access the area communications system. Automated hardware systems terminals will be subscribers to the area system via wire.

CURRENT AREA SYSTEM

Figure 4-1 depicts the current area communications system. The command operations company of the division signal battalion provides communications support for the DISCOM HHC/MMC. The following is a list of the communications facilities and services provided by this company:

- Installs and operates a radio teletypewriter terminal in the division's general purpose net.
- Installs and maintains cable and wire for local telephone circuits. DISCOM personnel will help the signal battalion personnel during the initial installation.
- Installs and operates the multichannel terminals in the division communications system.
- Installs, operates, and maintains automatic telephone and switching facilities. These facilities provide

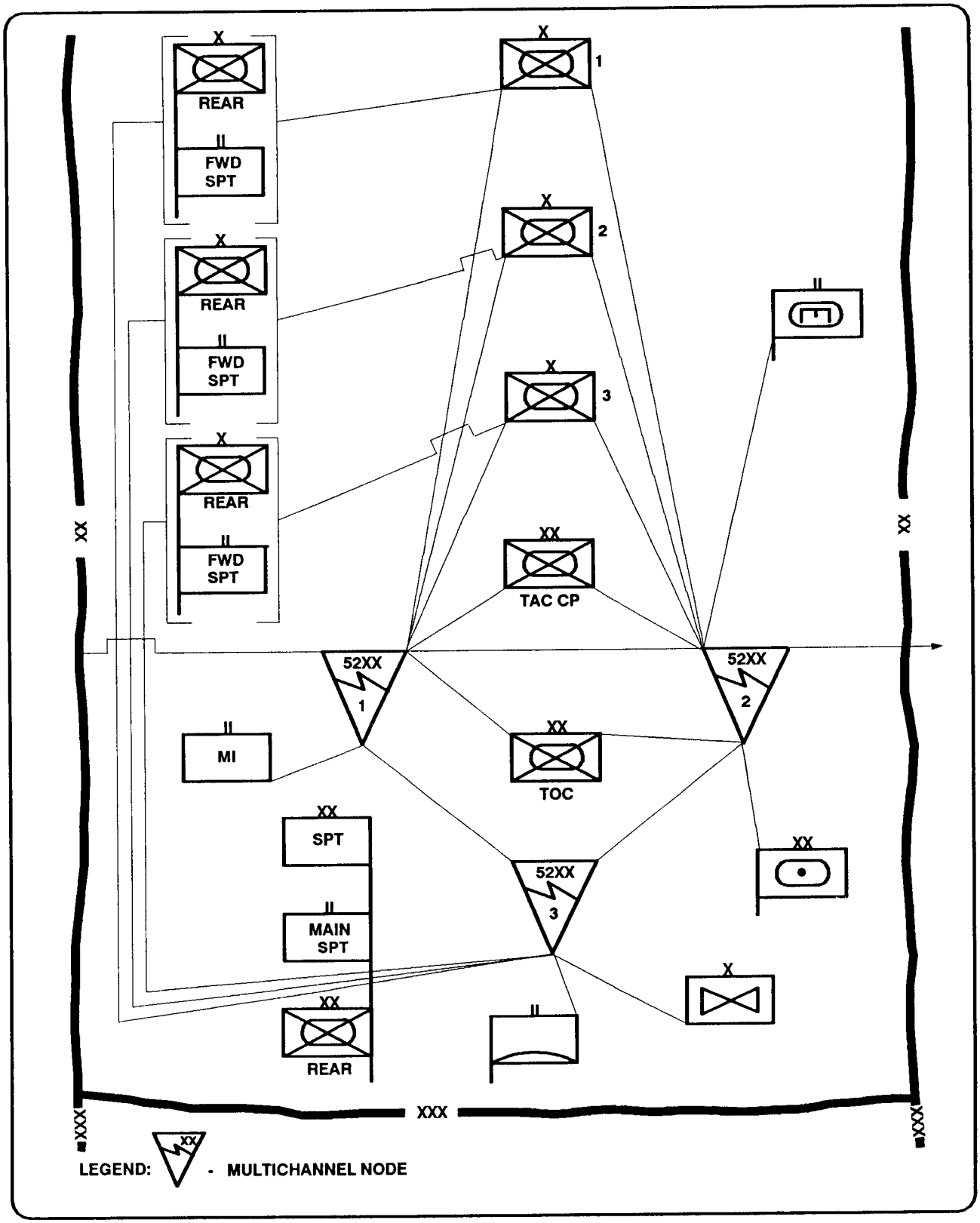

Figure 4-1. Sample armored/mechanized infantry division multichannel diagram (current area system).

access to the area system and local telephone subscriber circuits (DISCOM switchboard).

- Provides telephone equipment for the DISCOM HHC and DMMC (see Figure 4-2).
- Provides a record traffic receiving and distribution center.
- Installs and operates a net radio interface facility for single channel voice radio access to the division's telephone system.

Telephone installer-repairer personnel install and maintain local telephones for the DISCOM headquarters.

Under MSE, the existing 2-wire switchboards and telephones will not be compatible with the 4-wire digital system. The DISCOM HHC, however, will keep the switchboard for internal operations and for local security.

MOBILE SUBSCRIBER EQUIPMENT AREA COMMUNICATIONS SYSTEM

MSE is the area common user voice communications system within the corps. It is the primary means for command and control from the corps rear to brigade rear. It will be deployed from the corps rear boundary forward to the maneuver battalion main CP. The MSE system is comprised of four functional areas:

- Area coverage.
- Wire subscriber access.
- Subscriber terminals.
- Mobile subscriber access.

AREA COVERAGE

Area coverage means that MSE provides common user support to a geographic area, as opposed to dedicated support to a specific unit or customer. Figure 4-3, page 4-5, shows the deployment of area nodes across a corps area. These nodes are called node centers. These centers are shown in Figure 4-4, page 4-6. They are under the control of the corps signal officer,

At division level, the signal battalion operates four of these nodes. The small and large node extension switchboards are connected to these nodes via line-of-sight radios. The following switchboards are organic to the division signal battalion:

- 16 SEN switchboards capable of supporting 26 to 41 subscribers each.
- 1 LEN switchboard capable of supporting 176 customers.

Figure 4-5, page 4-7, shows a typical deployment of switchboards within the division. The G3 will determine the location of switchboards based on the recommendations of the division C-E officer.

The C-E officer considers the commander's intent, customer requirements, and other factors of METT-T. Switchboard locations cannot be consistently related to specific units.

WIRE SUBSCRIBER ACCESS

Wire subscriber access points will provide the entry point (interface) between fried subscriber terminal and the MSE area system. The fixed subscriber terminal and its equipment are owned and operated by the users. The signal units operate the MSE area system. Figures 4-6 and 4-7, page 4-8, show the MSE switchboard configurations. It is through one of these configurations that the DISCOM HHC/MMC ties into the area system,

The following are the two types of interface points:

- The signal distribution panel (junction box) J1077. Each panel can provide up to 13 subscriber access points.
- Remote multiplexer combiners which provide up to eight subscriber access points.

Beyond these two interface points, the using units are responsible for the installation and operation of fixed subscriber terminal instruments. They are also responsible for the installation and maintenance of the WF 16 field wire from the instruments to the interface points into the area system.

SUBSCRIBER TERMINALS (FIXED)

Subscriber terminals used by the DISCOM are digital nonsecure voice telephones. These provide full duplex digital, 4-wire voice as well as a data port for interfacing the AN/UXC-7 facsimile (informal record traffic). The TACCS computers (for CSS STAMIS), the AN/UGC-144 (single subscriber terminal for formal record traffic), the unit-level computers (for the unit-level logistics STAMIS), and the ATCCS (for the CSSCS) will interface through these terminals. Figure 4-8, page 4-9),

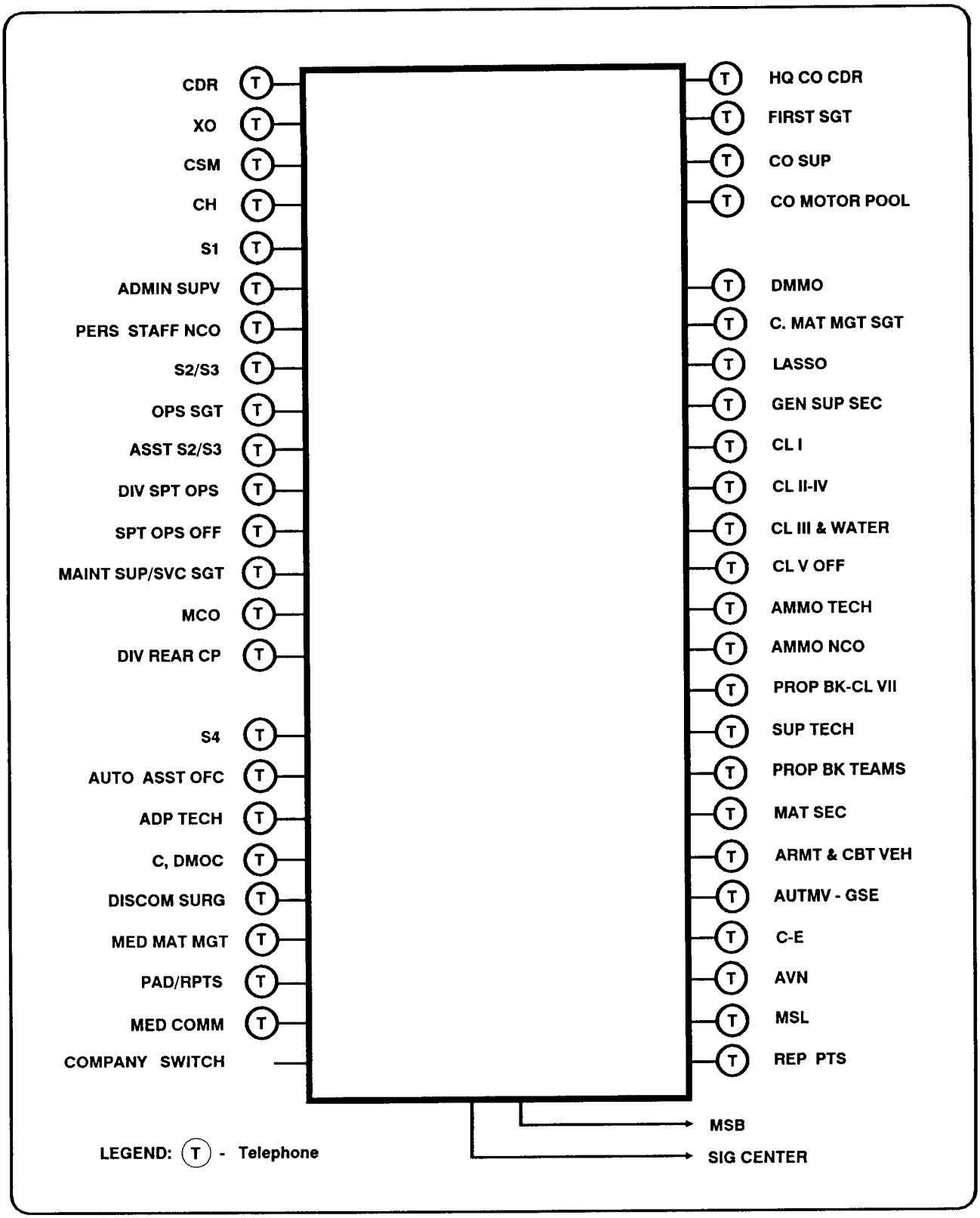

Figure 4-2. DISCOM HHC/MMC wire net.

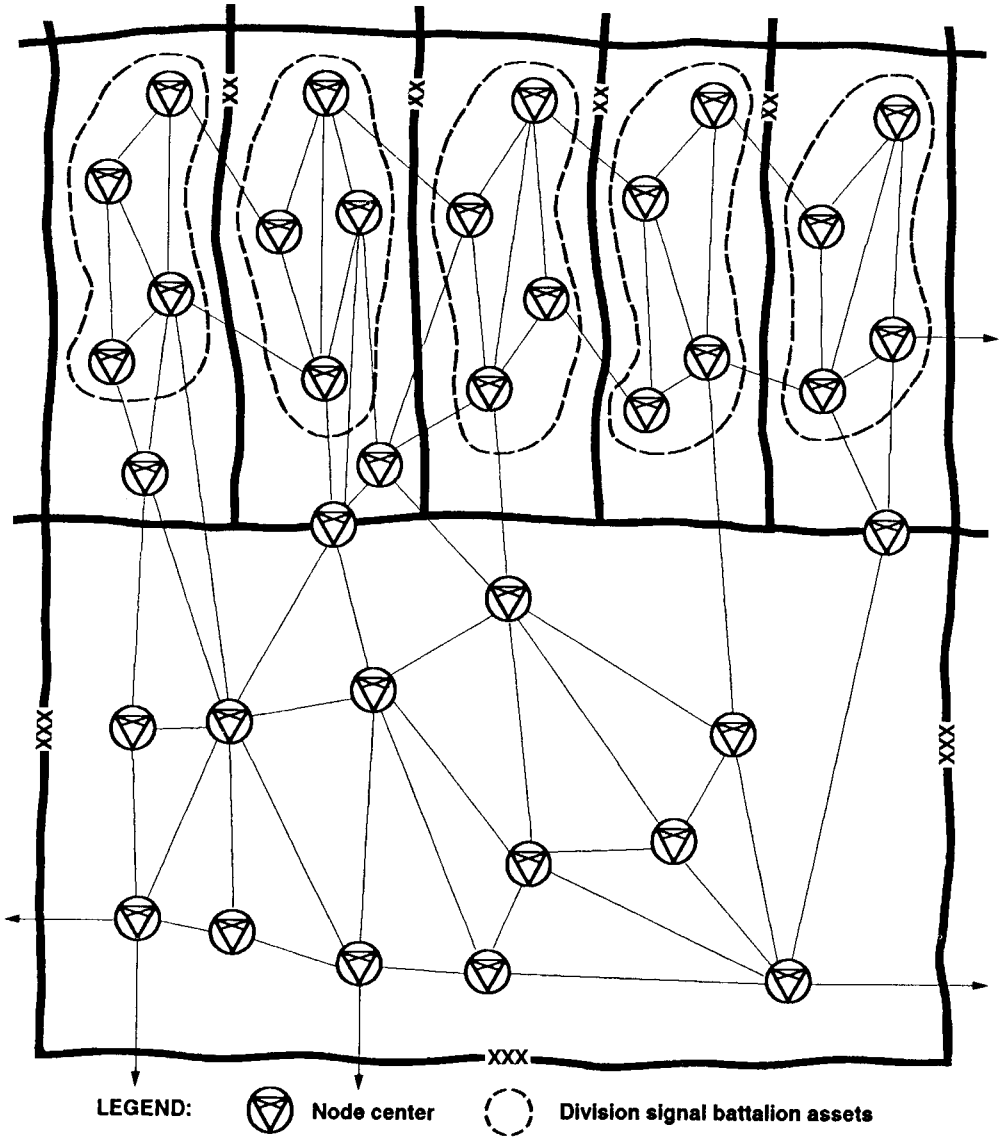

Figure 4-3. Deployment of area nodes (MSE).

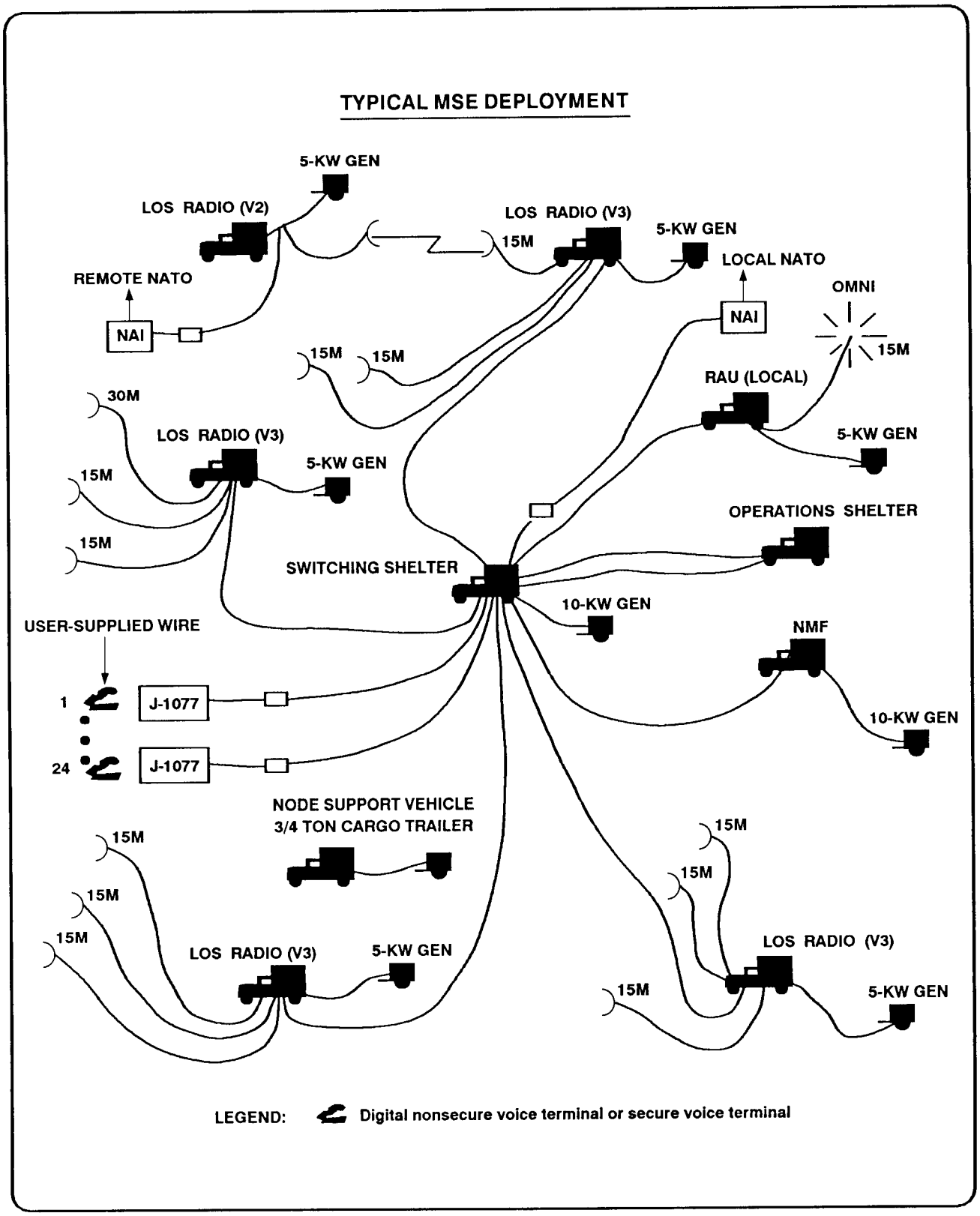

Figure 4-4. Node center.

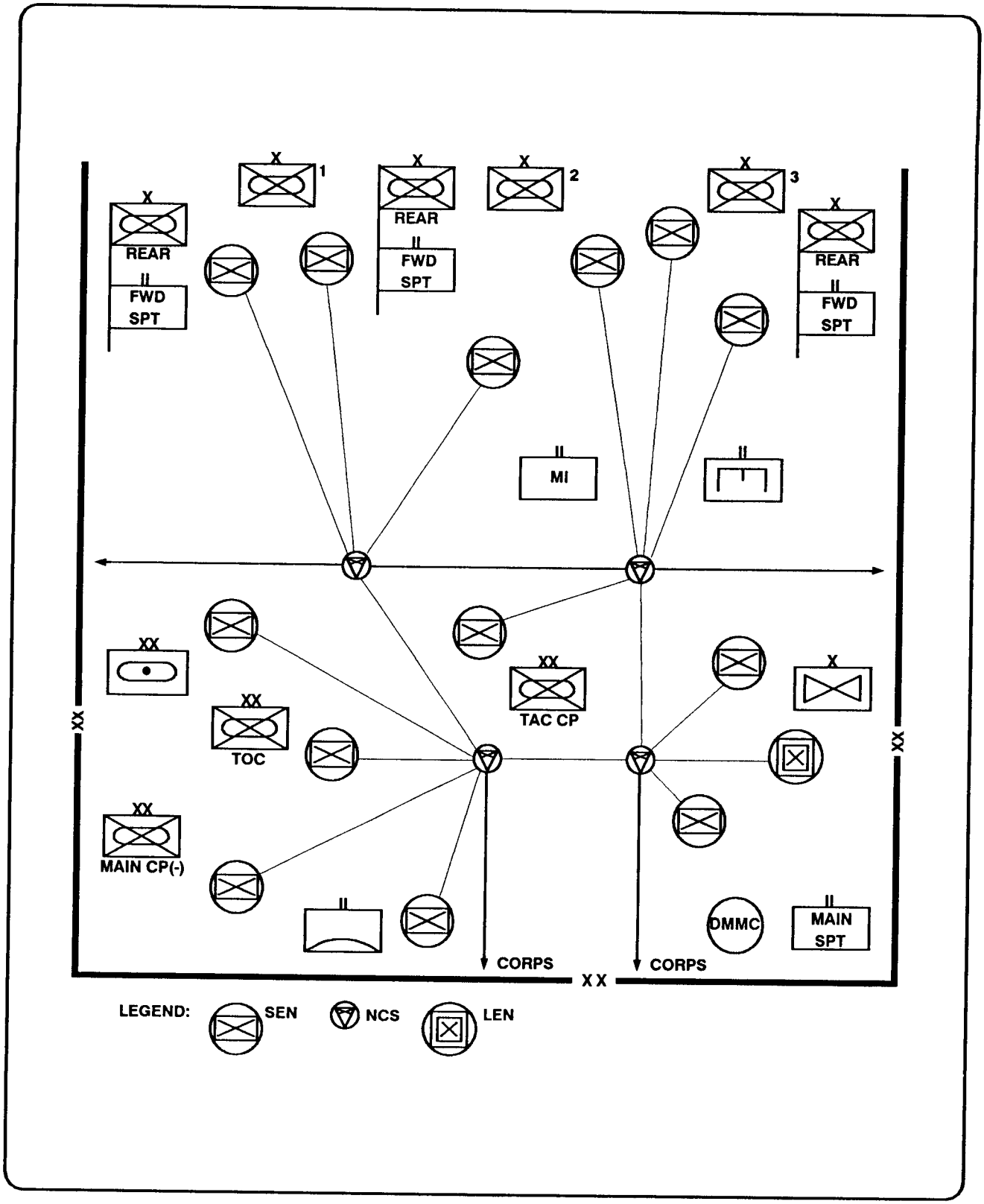

Figure 4-5. Sample division deployment of SEN and LEN switchboards.

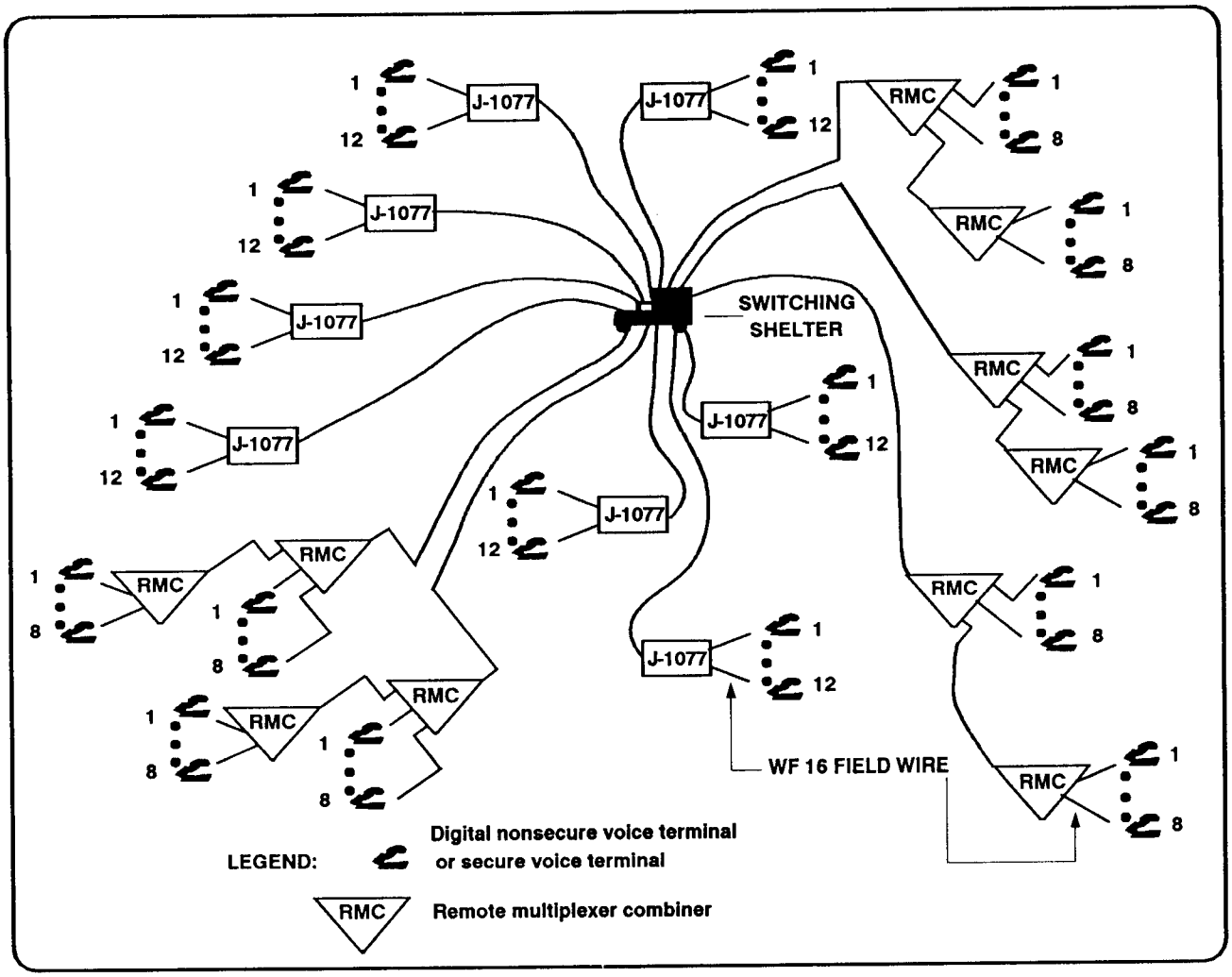

Figure 4-6. LEN switchboard interface.

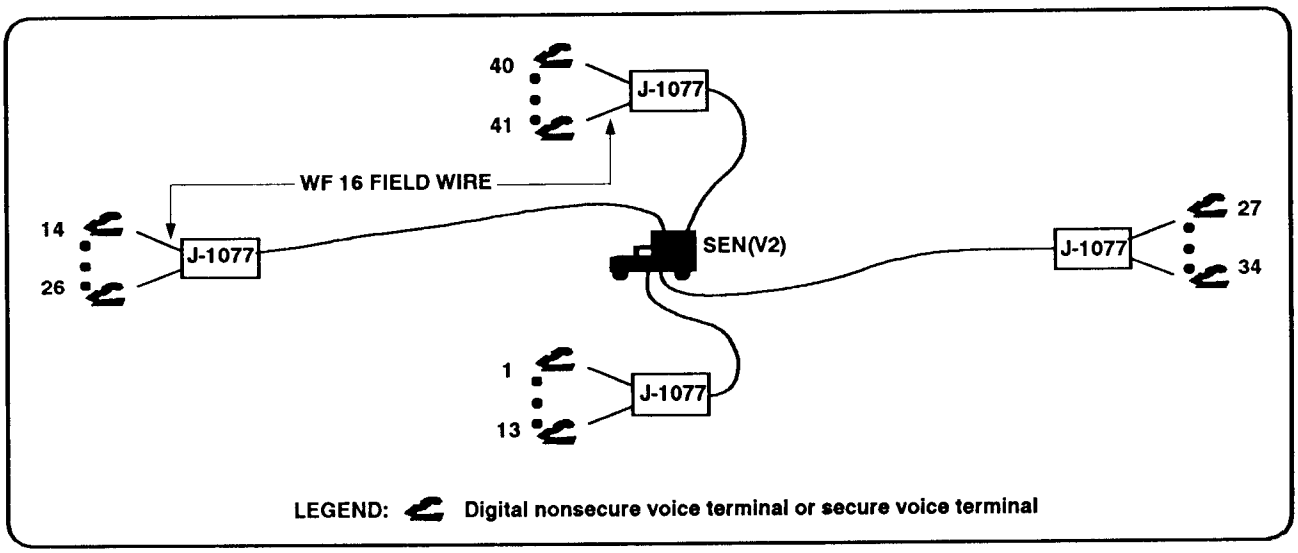

Figure 4-7. SEN switchboard interface (V2).

USER	DEVICE	DATA TERMINAL	STAMIS
CDR	○ ○		
XO	○		
S1 (2 ea)	○ ○	TACCS, FAX - SST	SIDPERS
S2/3	○ ○		
PLANS/INTEL (2 ea)	○ ○	*AC - TCP, FAX	MCS
COMM BR	○		
SPT OPS	○ ○	ATCCS , FAX	CSSCS
MCO	○ ○	TACCS	DAMMS-R
AUTO ASST OFC	○	TACCS (2 ea) , ULC (2 ea)	SYSTEMS SUPPORT
S4	○	ULC	ULLS -S4
MED OPS	○ ○	ATCCS	MED - PAR, MED - BLD
MED MAT	○	ATCCS	MED - LOG
PAD/RPTS	○		
DMMC OFC (3 ea)	○ ○	ATCCS, FAX	CSSCS
CL I BR	○		
CL II - IV BR	○	TACCS	SARSS-2A
CL III AND WTR SUP BR	○		
CL V SUP SEC (3 ea)	○ ○	TACCS	SAAS-DAO
PROP BK - CL VII SEC	○		
DOC CON	○	TACCS (7 ea)	SPBS-R
MGT- ASSET ACCT	○	TACCS	SPBS-R
RPT BR	○		
MAT SEC	○	TACCS	SAMS-2
ARMT- CBT VEH	○		
AUTMV - GSE	○		
C - E	○		
AVN	○		
MSL	○		
REP PTS	○	TACCS	SARSS-2A
HQ CO	○	ULC	ULLS
LASSO (2 ea)	○	DAS-3	DS4
CHAPLAIN	○		

LEGEND: ○ MSRT ○ DNVT * Interim equipment

Figure 4-8. DISCOM subscriber terminal assignment, fixed and mobile.

portrays the assignment of this equipment for the DISCOM HHC/MMC.

MOBILE SUBSCRIBER TERMINAL

The MSE mobile subscriber terminal is the AN/VRC-97 mobile subscriber radiotelephone terminal. This MSRT consists of a very high frequency radio and a digital *secure* voice terminal. This is a vehicle-mounted assembly. The MSRT interfaces with the MSE system through a radio access unit. The primary use of the MSRT is to provide mobile subscribers access to the MSE area network. Figure 4-9 portrays a typical MSRT interface into the area system. RAUs are deployed to maximize area coverage and MSRT concentrations. MSRTs can also operate in CPs to allow access to staff and functional personnel. Figure 4-8 represents assignment of MSRTs in the DISCOM, The MSRT user will have a KY68 telephone connected to the radio mounted on his vehicle. As long as the radio unit has line-of-sight contact with the RAU, it has connection into the area system. The operational planning range is 15 kilometers from any RAU.

COMBAT NET RADIO SYSTEM

The combat net radio structure is designed around three separate radio systems; each has different capabilities and transmission characteristics. The three systems are –

- SCOTT.
- IHFR.
- SINCGARS.

SCOTT is a stand-atone transportable tactical satellite communications terminal. The other two systems, IHFR and SINCGARS, will provide means of voice transmission of C2 information. They will also provide means for data transmission. This will be necessary if data transfer requirements cannot be met by the MSE system.

Current CNR equipment in the DISCOM consists of the AN/GRC-106 and the AN/VRC-12 series radios. These will be replaced by IHFR and SINCGARS series respectively. SINCGARS ***is*** a new family of VHF-FM radios. These radios are designed for simple, quick operation using a 16-element keypad for push-button tuning. They are capable of short-range or long-range operation for voice or digital data communications. The planning range is 8 to 35 kilometers. They also operate in a jam-resistent, frequency-hopping mode. This can be changed as needed. IHFR is a family of high frequency radios. Radios include the AN/PRC-104 manpack radio and the AN/GRC-193 vehicular radio.

DISCOM HHC/DMMC RADIO NETS

DISCOM COMMAND/ OPERATIONS NET (FM)

The DISCOM command/operations net is the principal net operated by the DISCOM headquarters. See Figure 4-10, page 4-12. This net is a backup to MSE. It is used to command and control elements of the DISCOM in the performance of its logistics mission. The net control station is the S2/S3 section. Stations in this net monitor the division command/operations net and the division intelligence net. This net is also used for rear operations as

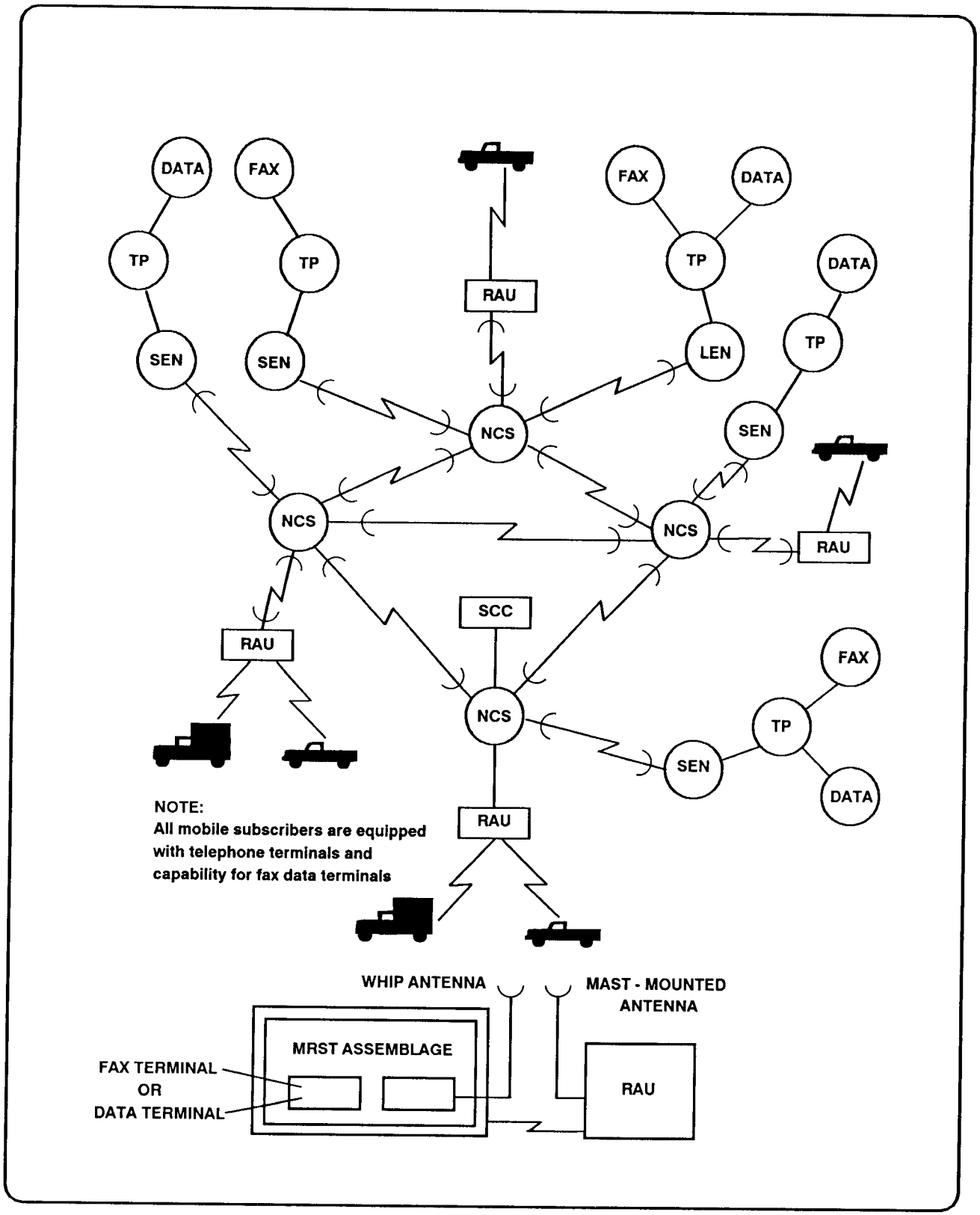

Figure 4-9. Mobile subscriber interface.

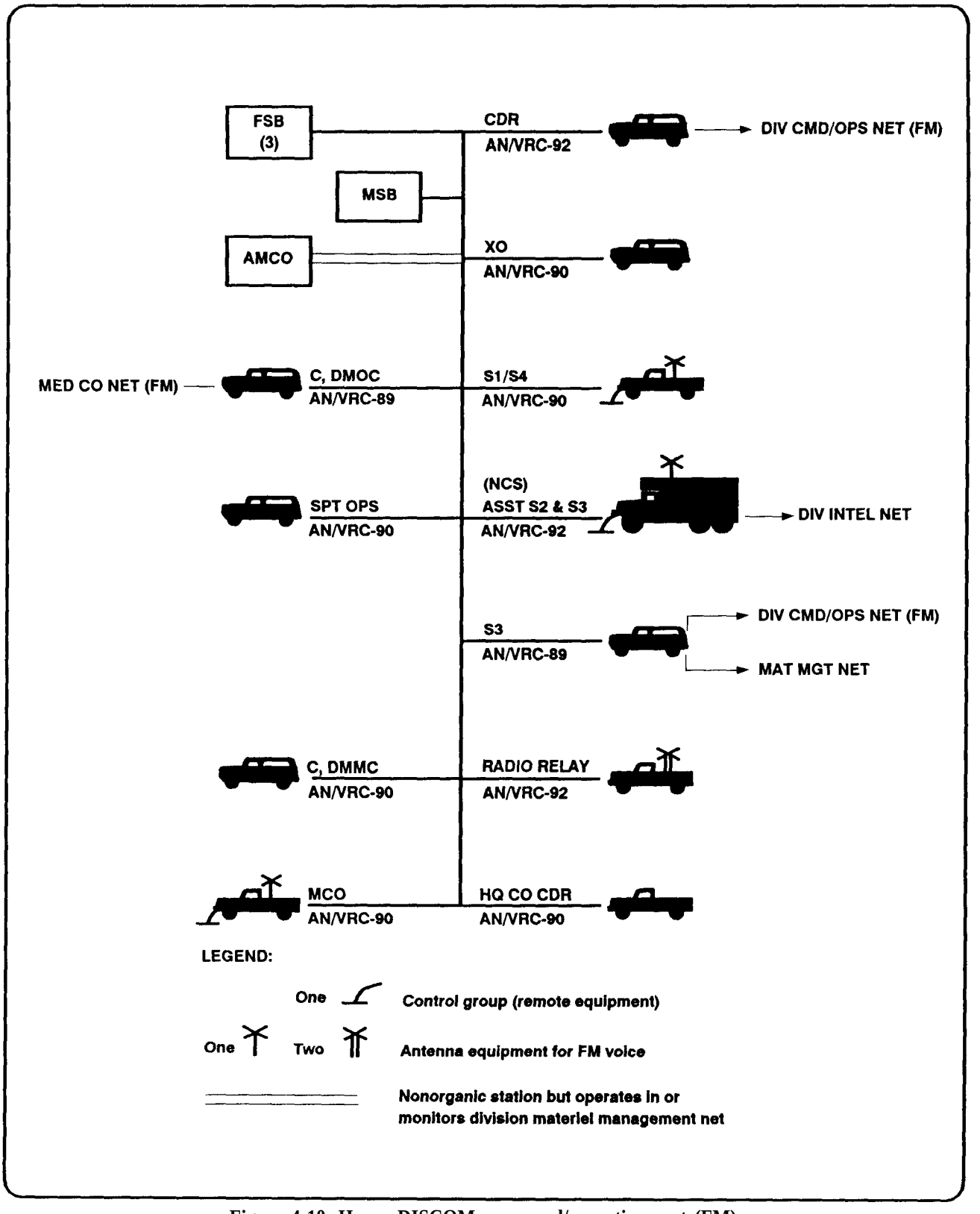

Figure 4-10. Heavy DISCOM command/operations net (FM).

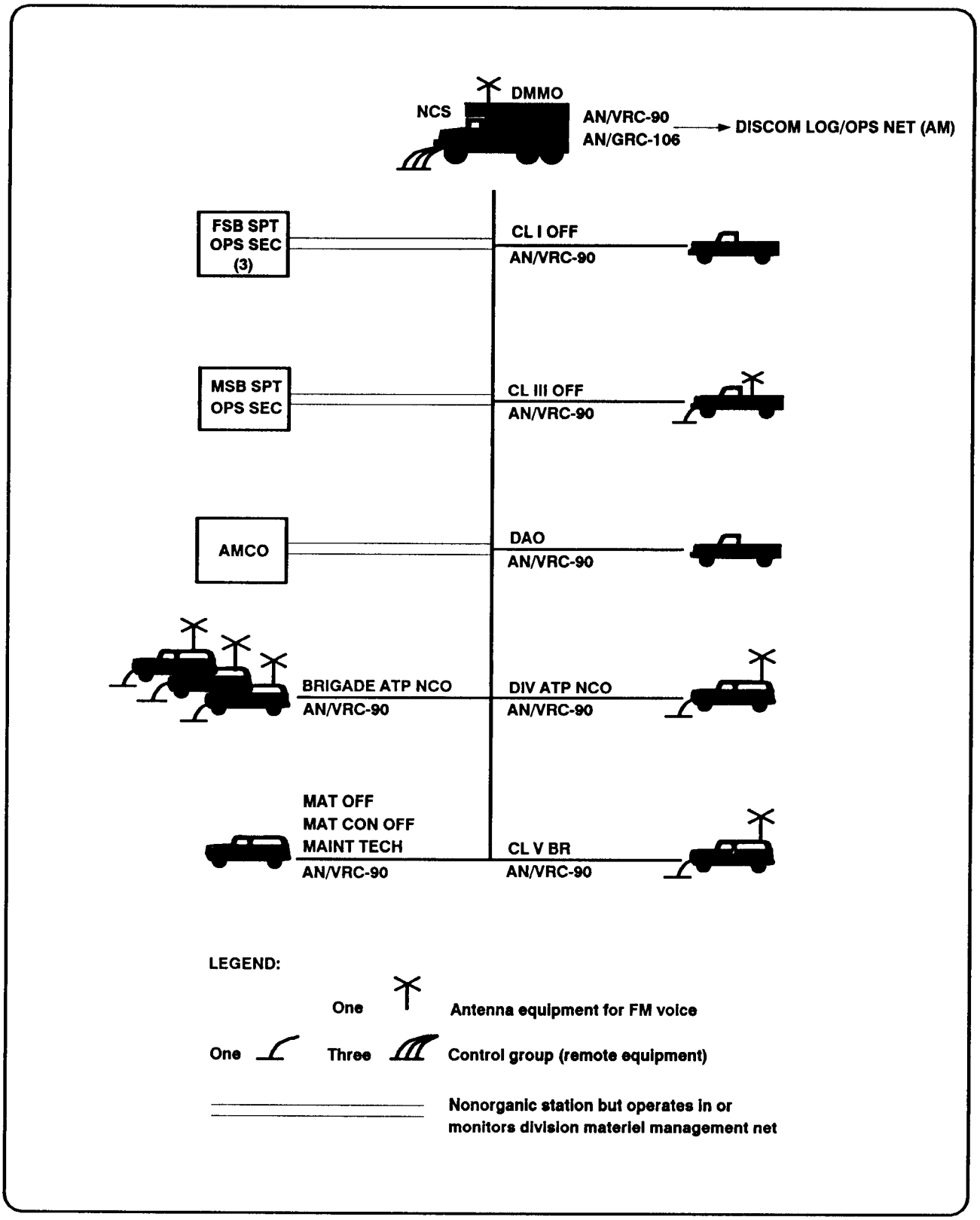

Figure 4-11. DISCOM materiel management net (FM).

Class II-IV Supply Branch Technician

The Class II-IV supply branch technician does not have a radio assigned to the section. He has access to the net by using radios assigned to other branches in the DMMC. The layout of the DMMC will determine which branch radio he will use.

Class V Supply Section Officer

The DAO uses the materiel management net to provide coordination and control necessary to monitor ammunition supply. The DAO uses a mobile station in this net to solve problems while on the move. The DAO must always be able to communicate with the DMMC chief. The DAO communicates with the G3 and the COSCOM MMC Class V section via the area communications system. He communicates with each support battalion via the materiel management net.

Within this net, the DAO has a radio. The ammunition supply technician, the chief ammunition NCO, and the ammunition inspection NCO share a radio. They normally operate from the DMMC field location. The two radios are in separate trucks. These radios provide a communication link with the division and brigade ammunition NCOs located at the ATPs. The ATP NCOs have a radio and can communicate with these two sources for their information and guidance.

Materiel Officer

The materiel officer uses his mobile station in this net to coordinate with the DMMC. This allows for the quick resolution of materiel problems throughout the division.

DISCOM LOGISTICS OPERATIONS NET (AM-SSB)

This net provides along-range command and control link for the DISCOM. This is especially helpful when the division is operating over extended distances. It also provides a long-range link to the COSCOM elements as required. The net control station for this net is the DISCOM support operations branch (Figure 4-12).

DISCOM MEDICAL OPERATIONS NET (AM-SSB)

The chief of the DMOC uses this net to coordinate patient medical regulating, air/ground evacuation, and emergency medical resupply. This coordination is with the division medical companies and corps medical brigade elements (Figure 4-13).

COMSEC

COMSEC consists of measures taken by a unit to prevent unauthorized persons from gaining information of value from communications. It includes cryptosecurity, physical security, transmission security, and emission security.

Supervisors must prescribe policies and procedures for safeguarding COMSEC materiel during tactical operations. They must also provide instructions for implementing emergency procedures during operations. The responsibility for safeguarding classified COMSEC information rests not only with the commander but with every individual in the command. This especially applies to those people who handle, store, use, or have knowledge of subject information.

The sensitivity of COMSEC information dictates that it be available only to those personnel who have a need to know. A person's office, position, or security clearance does not automatically entitle him access to COMSEC information. However, all personnel who require access to classified COMSEC information must have the appropriate security clearance.

COMSEC materiel must be requested in advance. The COMSEC custodian must be informed at least 24 hours prior to the requested pickup time. Users are issued COMSEC materiel on a SF153 (Hand Receipt).

Hand-receipt holders/users physically verify the serial numbers and quantity of COMSEC materiel they are receiving against the hand receipt. This is done prior to signing for the materiel and ensures there are no discrepancies. These hand-receipt holders cannot and will not subhand-receipt COMSEC materiel they have on hand receipt without prior approval of the COMSEC custodian.

The prompt reporting of physical and cryptographic security violations and compromises is essential to the maintenance of adequate communications security. A compromise results from any occurrence that enables unauthorized persons to derive useful information from encrypted communications.

A compromise may result from either of two types of insecurities. Physical insecurities occur

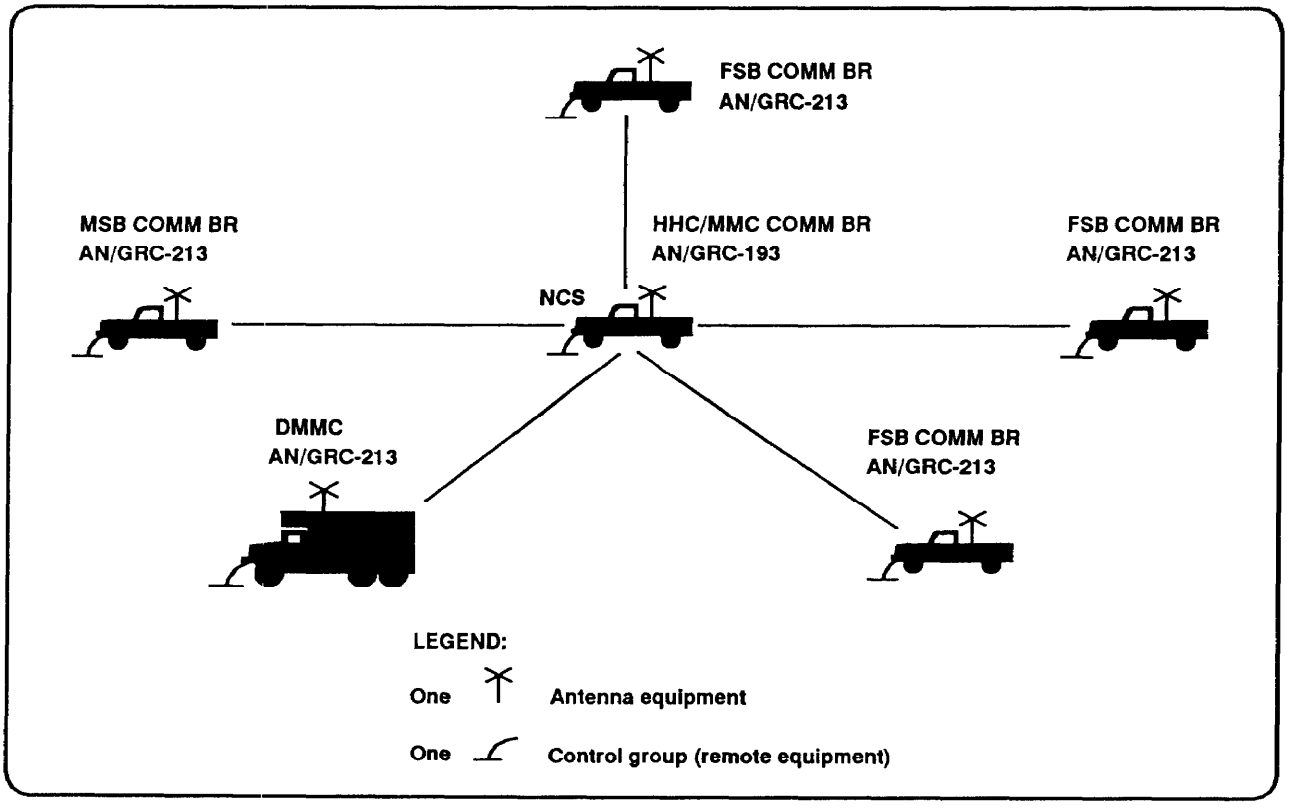

Figure 4-12. DISCOM logistics operations net (AM-SSB).

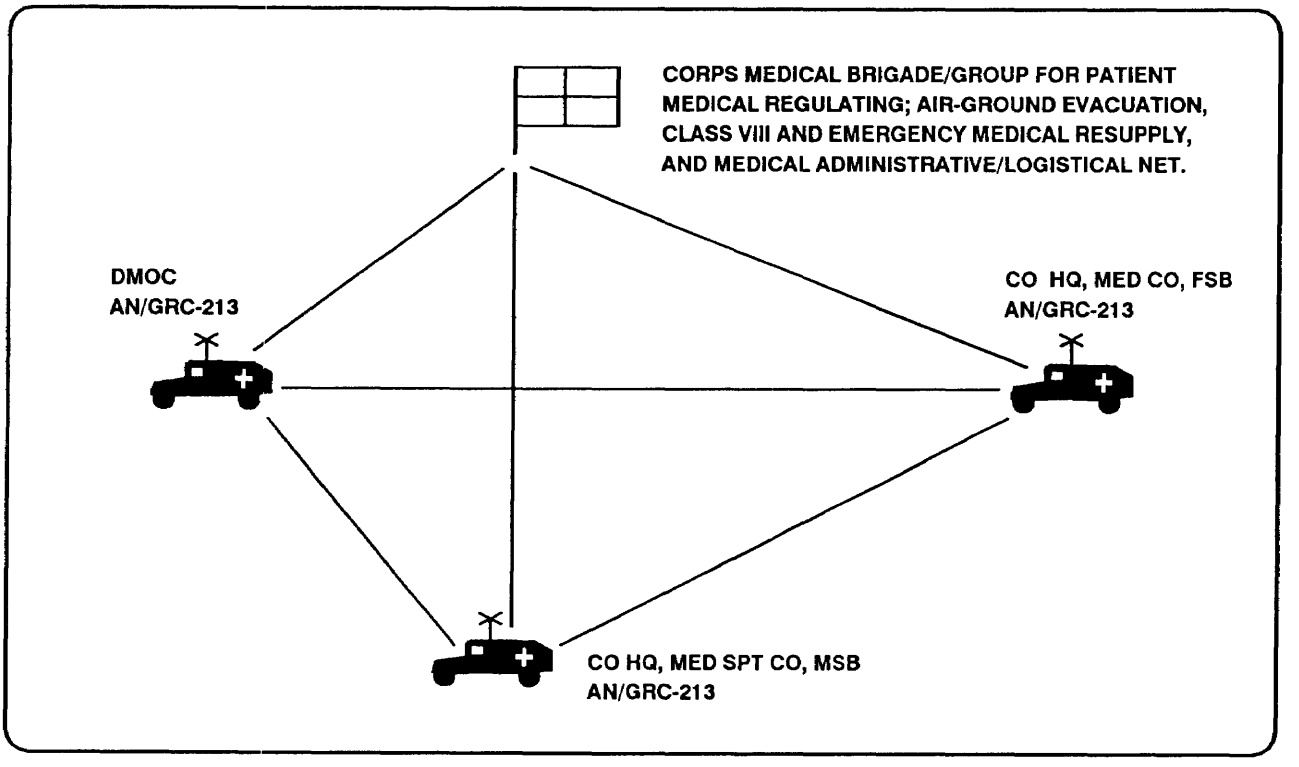

Figure 4-13. DISCOM medical HF voice net.

when classified information is lost or possibly exposed to an unauthorized person. This includes information subject to compromise through personnel insecurities. Personnel insecurities include detection, unauthorized absence, deliberate or inadvertent disclosure to an unauthorized person, and the removal of a security clearance for cause.

Any known or suspected compromise or other security violation must be reported immediately to the commander, COMSEC custodian, or supervisor. He will in turn determine the necessary actions to be taken.

Destroy all superseded COMSEC materiel beyond recognition.

OPSEC

OPSEC deals with protecting friendly military operations and activities by identifying the EEFI and providing appropriate protection to those EEFI. It aids in keeping the enemy from learning how, when, where, and why US forces do something. A basic OPSEC program would consist of four phases.

ESTABLISHING COMMAND'S SECURITY OBJECTIVES AND DEVELOPING ESSENTIAL ELEMENTS OF FRIENDLY INFORMATION

Initially, the commander identifies what operations, activities, and projects must not be compromised to ensure accomplishment of his overall mission. These identified areas are translated into the command's security objectives. The CSO are usually stated broad terms (for example, "prevent technology transfer of the...technology"; "achieve surprise fielding of the ...weapon systems"; or "prevent disclosure of the unit's readiness and deployment posture"). CSO properly stated indicate "what we are doing and why we are doing it."

The CSO are used as a basis to develop EEFI. EEFI are specific, critical, and sensitive items of information that individually or collectively need protecting. Protection will preclude the compromise of the CSO. Information such as specific dates, times, locations, intentions, and capabilities may need to be protected.

EEFI can include both classified and sensitive unclassified information. Sensitive, unclassified information is information which could give an insight into an area of classified information or divulge CSO. A combination of more than one piece of sensitive, unclassified information may contain sufficient detail to warrant classification. Disclosure of this sensitive, unclassified information could have negative results on future operations, activities, or projects.

DETERMINING THE POTENTIAL THREAT

The threat is determined by evaluating the capabilities of foreign intelligence services to collect EEFI. The threat profile should evaluate foreign intelligence awareness, their motivation, and their capability to collect information. The profile should also give you what the probability will be of your operation, activity, or project being targeted. Collection of intelligence information by foreign intelligence service is accomplished by a variety of means. The following disciplines normally will be included in a multisource intelligence threat:

- HUMINT is intelligence obtained by using people to gather various items of information. HUMINT collection involves both overt and clandestine operations. Examples of overt operations would include information obtained from public records and unclassified publications and newspapers. Clandestine operations include people eavesdropping on conversations and conducting surveillance or special operations.
- SIGINT is intelligence obtained by intercepting electronic signals. This information is obtained by intercepting telecommunications signals, such as telephone or radio conversations (normally referred to as COMINT). Information also is obtained by intercepting electromagnetic nondata-related radiations, such as radar signals (normally referred to as ELINT). Signal security is an overall term for the security measures taken to deny collection of information from COMINT and ELINT operations.
- IMINT is intelligence obtained through the use of photographic, infrared, or radar imagery equipment. Satellites, aircraft, and land or sea based vehicles/vessels can house imagery equipment. IMINT also can be provided by human sources who employ imagery equipment.

DEVELOPING A UNIT PROFILE

The unit OPSEC officer works with the CI section to develop a unit profile. With a profile, the OPSEC officer can determine what information a foreign

intelligence service might collect. This profile allows a unit to see itself as the enemy would see it. A profile consists of patterns and signatures, Patterns are stereotyped actions which so habitually occur in a given set of circumstances that they cue an observer (foreign intelligence service). So habitual are these actions, that the observer is able to determine the type operation/activity/project, its capabilities, or its intent. Signatures provide the identification of the operation/activity/project. Signatures result from unique visual (imagery), electromagnetic, olfactory, or sonic displays. A unit profile is developed by a team. The team should observe every facet of the operation to identify patterns and signatures. The team members should be knowledgeable in specific aspects of the operation/a ctivity/project. Separate profiles should be developed for the following areas: operations/maneuvers, communications/electronics, intelligence, logistics, and administration/support.

ASSESSING VULNERABILITIES

Once the threat is identified and a profile developed, a risk assessment is prepared. The assessment centers on the operation/activity/project's vulnerability to collection. All EEFI must be considered in this assessment. The assessment considers numerous factors. Examples of some factors are the project sensitivity, or the known, or suspected collection priority by foreign intelligence service. The operating environment, the proximity to international borders, and security programs are some additional factors. Security education as well as physical and natural barriers are also factors to be considered. An assessment of where, how, and why an operation/activity/project is vulnerable naturally leads to recommendations on how to reduce these vulnerabilities.

A countermeasure is any action taken to eliminate or reduce a vulnerability to collection. When recommending countermeasures, planners should consider on-the-spot corrections which effectively minimize or neutralize identified vulnerabilities. Low cost/no cost solutions must be sought and emphasized. Such recommendations may be of a temporary or permanent nature. Temporary recommendations to neutralize a vulnerability usually relate to an event. When the event takes place, further action is no longer required. Where extensive corrections must be taken or high costs are involved, recommendations should be prioritized to permit an incremental approach for adoption that is phased over a period of time. A commander's decision on what countermeasures to implement relate directly to risk versus cost benefit.

Principal components of any OPSEC program include physical security, information security, signal security, security education, and at times, deception operations.

Physical security measures may include a badge and pass system, security guards, and perimeter fencing. Such measures should be included, as appropriate, when you develop your OPSEC program. A good reference for physical security is FM 19-30.

Information security is also of vital importance to the OPSEC program. Security procedures, such as using only approved storage containers, double-checking offices prior to departure, and ensuring the "need-to-know," are measures that can be taken to protect classified and sensitive, unclassified information. AR 380-5 contains important provisions dealing with information security.

SIGSEC includes all measures taken to deny collection of information from both COMINT and ELINT operations. Something as simple as not discussing classified or sensitive, unclassified information over the telephone can greatly assist in maintaining the security of an operation, installation, or activity.

Security education consists of initial security orientations, refresher briefings, foreign travel briefings, and debriefings. The focus of the training and education program is to highlight to all personnel, the threat that exists to classified and sensitive, unclassified information. The program also provides measures to be taken to reduce that threat to the lowest practical level. One objective of any security education program is to convince the individual that this is information he needs to learn. Without an awareness of the need for security on the part of all personnel, other security measures, such as fences, guards, and alarms, are reduced in effectiveness.

AUTOMATION SYSTEMS SECURITY

Automated systems are vulnerable to destruction, sabotage, and compromise. Security includes not only physical security of hardware devices but security of programs and procedures. Detailed guidance on

automated systems security is provided in AR 380-380. The following physical and security practices must be established for use of TACCS or other microcomputers –

- Locate the computer within an enclosure that provides controlled access.
- Secure all electrical facilities that support the system.
- Store magnetic media storage containers at least 20 inches from an exterior wall. (This helps provide protection against the potential effects of magnetic fields or radiation.)
- Restrict physical access to magnetic diskettes.
- Require that authorized operators have at least an interim confidential security clearance.
- Restrict access to the computer site by the use of classified passwords.
- Rotate unique operator passwords every 30 days or less.
- Control all log-ons and file access by unique operator passwords.
- Monitor device usage.
- Restrict the access of visitors.
- Monitor report distribution plans.
- Reduce the number of copies of each report.
- Destroy all printouts of reports and lists as new ones are printed.

Chapter 5

Sustaining the Soldier

CONTENTS PAGE

HEALTH SERVICE SUPPORT 5-1
SOLDIER SUPPLY SUPPORT 5-7
SOLDIER FIELD SERVICE SUPPORT 5-15

HEALTH SERVICE SUPPORT

The objective of the health service support system is to conserve trained manpower. This system provides a continuum of care. This starts at the point of injury or wounding and continues through the theater of operations to the CONUS support base. To achieve its objective, the HSS system is tailored into echelons or levels of care.

Echelon I, unit-level, HSS is provided by designated elements or individuals organic to the unit. These individuals are found in combat, combat support, and combat service support units. Major emphasis at this level of support is to stabilize and evacuate the casualty. Necessary measures are taken to treat and medically stabilize the casualty for evacuation to the next level of care. The following are treatment and stabilization procedures followed at the unit level:

- *Self-aid and buddy-aid.* Each soldier trains to be proficient in a variety of specific first aid procedures. Included in these procedures is aid for chemical casualties with particular emphasis on lifesaving tasks. This training teaches the soldier to give immediate care during a possibly life-threatening situation.
- *Combat lifesaver.* The unit commander selects nonmedical unit members to receive additional training to increase medical skills beyond basic first aid procedures. After training, these personnel are called combat lifesavers. Each squad, crew, team, or equivalent-size unit will have at least one combat lifesaver. The primary duty of the combat lifesaver does not change. The additional duty of the combat lifesaver is performed when the tactical situation permits.
- *Combat medic.* This is the first individual in the HSS chain who makes medically substantiated decisions based on MOS-specific training.
- *Treatment squad (aid station).* This element is trained and equipped to provide physician-directed advance trauma management to battlefield casualties. It also conducts routine sick call when not engaged in combat. Like elements provide this level of care in division, corps, and COMMZ units.

Echelon II, division-level, HSS is usually conducted at the clearing station. DISCOM medical companies operate clearing stations in the DSA and BSAs. The clearing station initially examines the casualty. The wounds and general status of the casualty are evaluated. This evaluation determines priority for treatment or evacuation. Emergency care including initial resuscitation continues. If necessary, additional emergency measures are instituted. However, they do not go beyond the measures dictated by the immediate treatment.

A medical treatment facility provides Echelon III HSS. The MTF is staffed and equipped to provide resuscitation, initial wound surgery, and postoperative treatment. Patients whose wounds are life-threatening may receive surgical care in a hospital (mobile Army surgical hospital) in the division rear area.

An MTF also provides Echelon IV HSS. This MTF is staffed and equipped for general and specialized medical and surgical care and reconditioning rehabilitation for return to duty.

MODULAR MEDICAL SUPPORT SYSTEM

A significant factor to the continuous and responsive medical support provided on the battlefield is the medical modular support system. This system standardizes all medical subunits within the division. The modular design allows the medical resource manager to rapidly tailor the force to respond to areas of critical need. The manager is able to augment, reinforce, or reconstitute almost anywhere on the battlefield. This system is designed to acquire, receive, and sort (triage) casualties. The system also provides emergency medical treatment and ATM.

HSS starts in the forward areas with the combat medic supporting each combat platoon or company team. From forward areas, patient evacuation is initially to the battalion medical platoon or section treatment squad (battalion aid station). From the battalion aid station, evacuation is then to the medical company treatment platoon (division clearing station).

Each module in the system is oriented to forward casualty assessment, collection, evacuation, treatment, and initial emergency surgery. When effectively employed they provide greater flexibility, mobility, and patient care capabilities than have been previously available. The five modules associated with the division are the:

- *Combat medic module.* This module consists of one combat medical specialist and his prescribed load of medical supplies and equipment.
- *Ambulance squad module.* This module provides for evacuation of casualties throughout the division and ensures continuity of careen route.
- *Treatment squad module.* This module consists of a primary care physician, physician's assistant, and six medical specialists. The squad is trained and equipped to provide ATM to the battlefield casualty. To maintain contact with the supported elements, each squad has two emergency treatment vehicles. Each squad can split into two treatment teams.
- *Area support squad module.* The area support squad module consists of one dentist trained in ATM, a dental specialist, an X-ray specialist, and a medical laboratory specialist.
- *Patient-holding squad module.* This squad is capable of holding and providing minimal care for up to 40 patients who can return to duty within 72 hours. This squad is organic to the medical companies of separate brigades, divisions, and armored cavalry regiments. It is also organic to echelons-above-division, area support medical battalions. The commander has the flexibility to adjust holding capacity based on METT-T (capacity cannot exceed 40 beds). These patients are usually ambulatory. Their condition generally allows for light duty such as helping fellow soldiers or assisting in the movement of the holding squad. Holding soldiers in the holding squad reduces the burden on limited corps and division evacuation assets. This helps improve the mortality and morbidity rates for seriously injured soldiers. Division and corps evacuation assets are free to focus on their evacuation, since they are not burdened with the evacuation of soldiers with minor injuries. The holding squad personnel are also trained for mass casualty situations. They can help in triage, management, and treatment of heavy loads of casualties.

DIVISION SURGEON

Though assigned to the division HHC, the division surgeon works closely with DISCOM medical elements to provide HSS throughout the division area. The division surgeon's immediate staff consists of a chief medical NCO, a clerk typist, and a patient specialist. These personnel along with the DMOC staff assist the division surgeon in the performance of his duties. The division surgeon is a special staff officer and is normally aligned with the G1. The division commander charges the surgeon with full responsibility for the technical control of all medical activities within the division. The division surgeon advises the division commander on all medical and medical-related issues. The surgeon's responsibilities include –

- Advising on the health status of the command and of the occupied or friendly territory within the commander's AO.
- Advising on the medical effects of the environment, NBC, and directed energy devices on personnel, rations, and water.
- Determining requirements for the requisition, procurement, storage, maintenance, distribution management, and documentation of medical, dental, and optical equipment and supplies.
- Coordinating with medical unit commanders, to include medical platoon leaders, for continuous HSS.
- Submitting to higher headquarters those recommendations on professional medical problems which require research and development.
- Recommending use of captured Class VIII supplies and equipment in support of EPW and other recipients.
- Advising on medical intelligence requirements including the examination and processing of captured medical supplies and equipment.
- Coordinating, as required with the corps medical resources and surgeon concerning HSS-related activities.

The following is a list of HSS operations requiring specific planning and coordinating from the surgeon's office:

- Treatment and medical evacuation, including aeromedical by Army air ambulance units.
- Dental service.
- Veterinary food inspection, animal care, and veterinary preventive medicine activities for the command as required.
- Professional support in subordinate units.
- Medical laboratory and blood banking service.
- Preventive medicine services.
- Medical supply, optical, and maintenance support, including technical inspection and status reports.
- Medical civic action programs.
- HSS aspects of rear operations.
- Preparation of reports regarding medical administrative records of injured, sick, and wounded personnel.
- Collection and analysis of operational data for on-the-spot adjustment in the HSS structure. This data is also used in postwar combat and materiel development studies.
- Supervision of HSS activities throughout the division and provision of technical guidance as required to ensure compliance with professional standards, approved doctrine, and division HSS **SOP.**

DIVSION MEDICAL OPERATIONS CENTER

The DMOC is the medical staff element of the DISCOM headquarters. It is responsible for advising and assisting the DISCOM commander and staff in determining requirements for HSS. In coordination with the division surgeon and appropriate elements of the division coordinating staff group, it is responsible for planning, coordinating, monitoring, and ensuring HSS to the division. It is responsible for synchronizing HSS operations to achieve maximum use of division and corps medical elements under operational control or attachment to the division. The specific functions of the DMOC include, but are not limited to, the following:

- Developing and coordinating patient evacuation support plans with the DISCOM and division staff and with the corps medical evacuation battalion.
- Coordinating corps-level HSS for the division with the corps medical group or brigade.
- Coordinating Army airspace command and control information with supporting corps air ambulance assets operating in the division. This is done through the G3 and brigade S3 air.
- Obtaining and providing road clearances and priorities for use of evacuation routes for supporting corps ground ambulances.
- Monitoring medical troop strength to determine task organization for mission accomplishment.
- Forwarding all medical information of potential intelligence value to the DISCOM S2/S3 section.
- Obtaining updated medical threat information and intelligence through the S2/S3 section for evaluation and applicability.
- Monitoring and advising on the disposition of captured medical supplies and equipment.
- Coordinating combat stress control support to forward areas.
- Coordinating preventive medicine support to forward areas.
- Providing training for and establishing maintenance priorities for repair and exchange of medical equipment using the theater army medical management information system.
- Evaluating emergency supply requests to the corps medical logistics facility and taking the necessary action to expedite shipment.
- Analyzing division medical supply operations, identifying trends in performance, and providing technical advice as necessary.
- Establishing and managing, in coordination with the division and DISCOM surgeons, the medical critical item list.
- Monitoring the medical equipment maintenance program established by the DMSO to ensure it remains a viable program.
- Assisting in the evacuation and replacement of medical equipment with the medical logistics facility.
- Providing technical staff assistance for the DMSO, as required, to ensure division-wide+ Class VIII supply support.
- Establishing procedures for and coordinating the disposition of captured medical materials.

MSB MEDICAL COMPANY

The MSB medical company provides division-and unit-level HSS, medical staff advice, and help to units in the DSA that are not otherwise supported. It also provides evacuation from the BSA and reinforces the FSB medical companies. The company consists of a headquarters, medical supply office, preventive medicine section, mental health section, optometry section, treatment platoon, and ambulance platoon, See Figure 5-1. FM 63-21 gives a full discussion of the operations of this company.

The company provides –

- Advice and help to the MSB commander and his staff on matters for conserving the strength of members of the command; preventive, curative, and restorative care; and related services.
- Triage, initial resuscitation, stabilization and preparation for evacuation of sick and wounded, and treatment of patients generated in the DSA.
- Mobile facilities for receiving and sorting patients.
- Reinforcement and reconstitution of FSB medical evacuation assets.
- Evacuation from unit-level medical elements and other units in the division rear without organic ambulances and medical support.
- Emergency and preventive dentistry care and consultation services.
- Emergency psychiatric treatment and mental health consultation services. This includes battle fatigue treatment.
- Division-level medical resupply to division and nondivisional units on an area basis.
- Patient holding for up to 40 patients able to return to duty within 72 hours,
- Limited laboratory and radiology services for division-level treatment.
- Preventive medicine and environmental health surveillance, inspection, and consultation services for division units.
- Optometric support limited to eye examinations, spectacle frame assembly using presurfaced single-vision lenses, and repair services.

FSB MEDICAL COMPANY

As discussed in FM 63-20, the forward support medical company provides division-and unit-level HSS to all units operating in the supported brigade area on an area basis. As shown in Figure 5-2, page 5-6, the company consists of a company headquarters, treatment platoon, and ambulance platoon.

The company performs the following functions:

- Treatment of patients with minor diseases and illnesses, triage of mass casualties, initial resuscitation and stabilization, advanced trauma management, and preparation for further evacuation of patients incapable of returning to duty.
- Ground evacuation for patients from battalion aid stations and designated collection points.
- Emergency dental care.
- Emergency medical resupply to units in the brigade area.
- Medical laboratory and radiology services commensurate with division-level treatment.
- Outpatient consultation services for patients referred from unit-level MTFs.
- Patient holding for up to 40 patients able to return to duty within 72 hours.
- Coordination with the UMT for required religious support.

MEDICAL SUPPLY OPERATIONS

The division medical supply office, which is part of the MSB medical company, is responsible for providing medical supply and unit-level medical maintenance support to the medical treatment elements within the division. The DMSO manages Class VIII supplies and equipment and executes the health service logistics plans.

The DMSO performs its mission by operating under the supply point distribution system. While each medical unit maintains its own basic load of medical supplies, the DMSO carries division operating stocks. The DMSO normally stocks a 5-day level of selected medical supply items. The number of days of supply and any additional items maintained by the DMSO are determined only after certain considerations are made. The division's mission, its location, and guidance from the division surgeon, and the DMOC medical materiel manager influence the final decision.

During deployment, lodgment, and early build-up phases, medical units operate from planned prescribed loads and from existing prepositioned war reserve

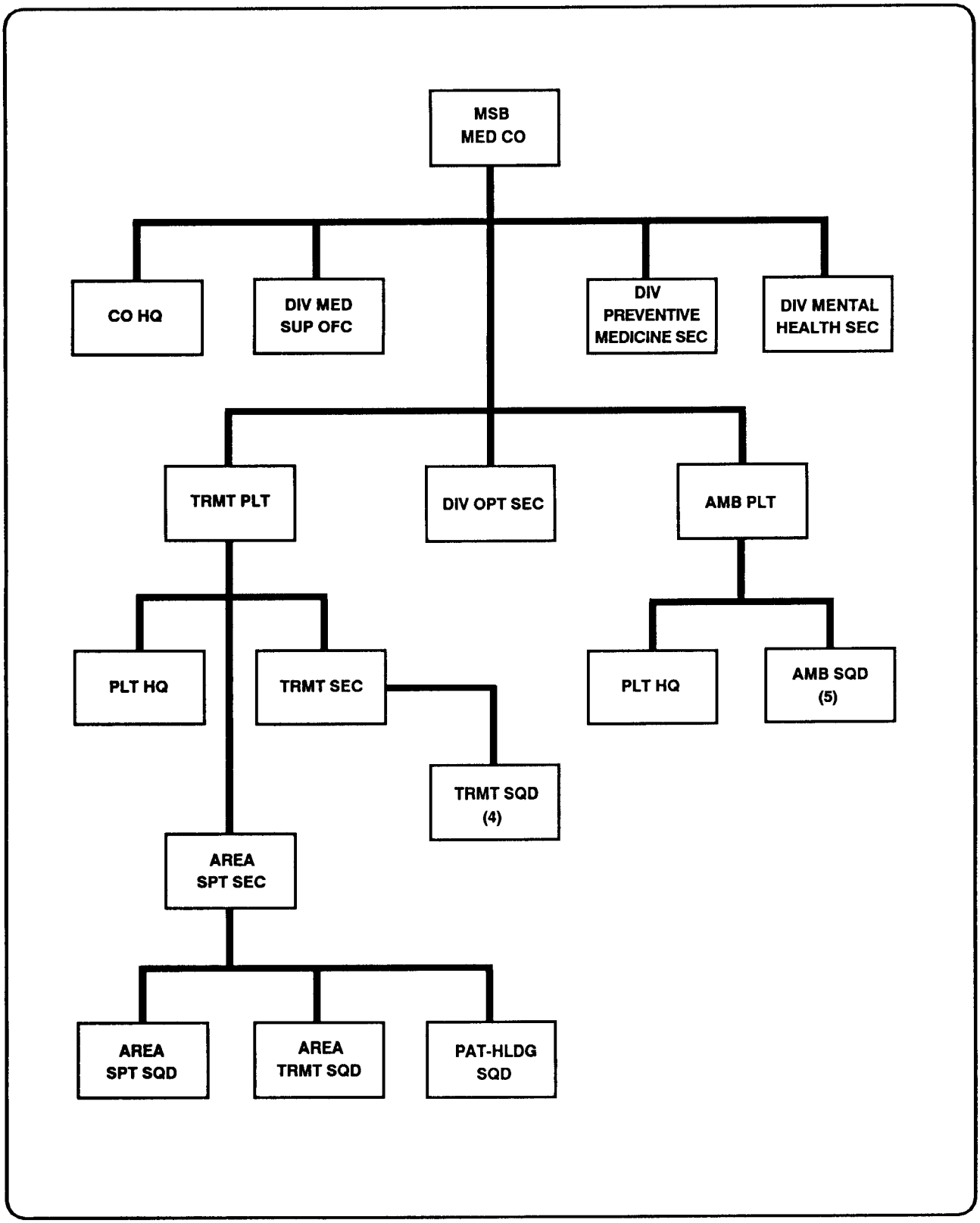

Figure 5-1. Organization of the MSB medical company.

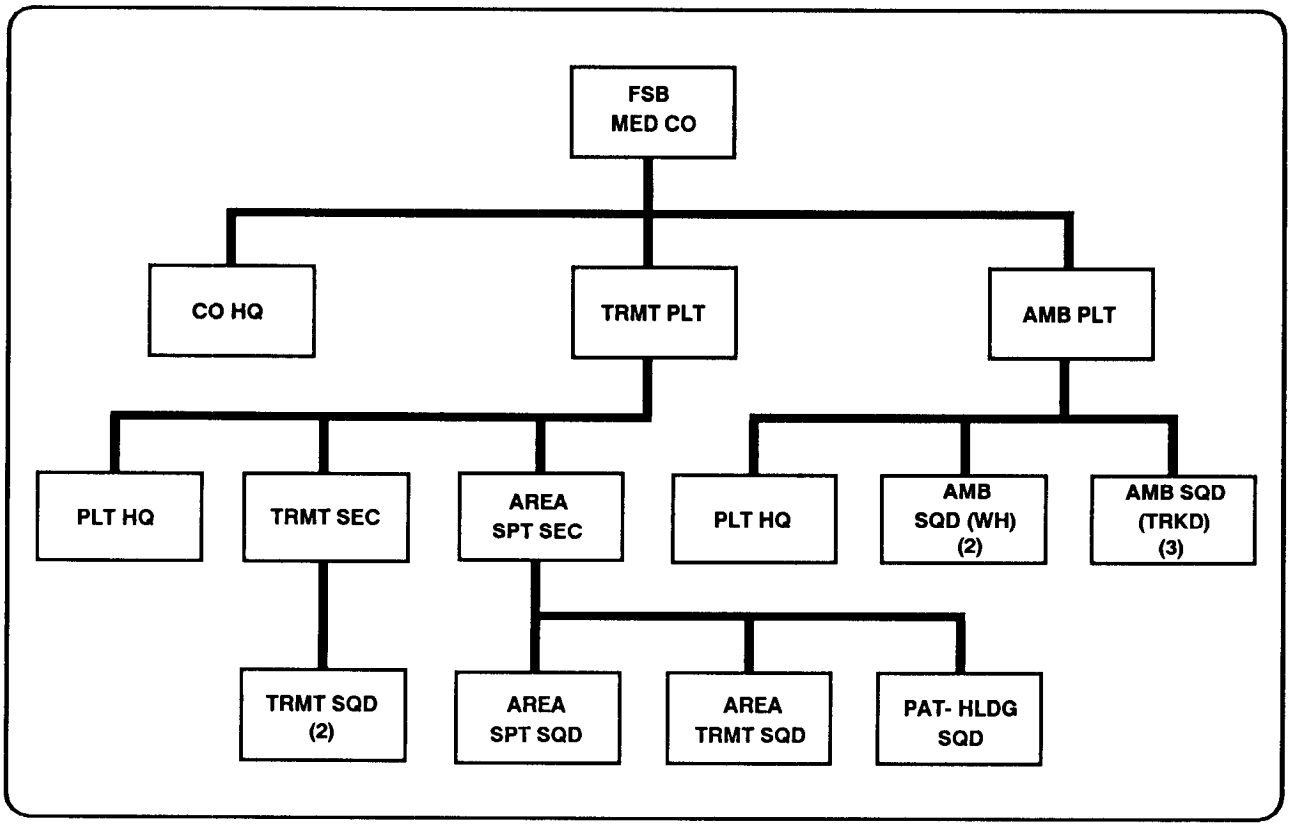

Figure 5-2. Organization of the FSB medical company.

stockpiles. These stockpiles are identified in the applicable logistics plan. Planning is a function of the DMOC in coordination with the division surgeon.

Initial resupply efforts may consist of preconfigured medical supply packages tailored to meet specific mission requirements. These preconfigured packages are pushed directly to the division. This continues until replenishment by line item requisitioning is established with the supporting medical logistics facility. Resupply by preconfigured packages is intended to support the initial phases of an operation. Continuation of this type of support is done on an exception basis. The primary reason for continuation would be operational needs. Planning for such a contingency must be directly coordinated with the DMSO. The DMSO will coordinate further Class VIII requirements with the supporting medical logistics facility.

The DMSO issues from the stock on hand or forwards the requisition to the corps medical logistics facility, using the division TACCS as required. The MCO coordinates the shipment of medical material from the DSA to the user in the forward area. Another method available is the backhaul method which uses medical evacuation resources.

Resupply of forward deployed battalion aid stations is the responsibility of the FSB medical company. Medical supply personnel operate a resupply point for the maneuver BASS based on supply point distribution. Backhaul transportation of medical supplies using returning ground and air ambulances is the preferred method of moving medical supplies to forward deployed units.

Resupply of the FSB medical company is performed by the DMSO. Requests submitted to the DMSO from the division medical treatment elements may be informal. This is in contrast to the formal procedures normally associated with support between the combat zone medical logistics facility and the DMSO. Requests may come by message with returning ground or air ambulances, by land lines, or through FM command nets within the division.

Emergency requests are immediately processed by the DMSO and issued to the requesting unit from on-hand stocks. The medical materiel branch of the DMOC has the responsibility for monitoring all emergency requirements. The DMSO coordinates with the DISCOM for transportation to fill emergency

requests which cannot be filled from on-hand stocks. This coordination is also done to meet shortfalls in the supply point distribution system.

Division medical maintenance support is provided by the DMSO. Medical maintenance personnel provide unit-level medical maintenance for repair of their own equipment as well as area support to units without such capabilities. The DMSO biomedical equipment maintenance NCO schedules, performs, and coordinates medical equipment maintenance for the FSMCs. Medical maintenance personnel from the DMSO are deployed forward as necessary to repair essential medical equipment. Maneuver battalion aid stations turn in their medical equipment in need of repair to the supporting FSMC. The FSMC sends this equipment to the DMSO when medical maintenance personnel are not deployed forward to the BSA. Medical equipment repairs beyond the capabilities of the DMSO are sent to the supporting corps medical logistics facility for repair.

MEDICAL EVACUATION

Evacuation from the maneuver BASS is normally provided by the FSMC ambulance platoon and a forward air ambulance team from corps assets. Typically, one team from the ambulance platoon is field sited at each BAS. The other ambulances of the platoon are located at AXPs, designated collection points, or at the clearing station.

The ambulance platoon of the MSB medical company and corps air and ground ambulance assets in the DSA normally provide evacuation from the FSMC. The ambulance platoon does not have enough assets to move the anticipated number of patients from the FSMC. It will normally require augmentation from the corps ground ambulance company. The medical evacuation battalion provides evacuation from the MSB medical company to the corps-level hospitals.

The ambulance platoon from the MSB medical company is mobile in its operations as its assets may be totally deployed at one time. The platoon teams are used to support specific units, task force operations, reinforcing support, or ambulance shuttles. Platoons or squads from the corps ground ambulance company may be in direct support, or OPCON to, the medical company in the DSA or BSA for evacuation of patients from the forward medical treatment elements.

A corps air ambulance company maybe designated to support a division. This company maybe deployed as OPCON, attached, or in direct support of the division. For aeromedical evacuation when OPCON ***or*** attached, the air ambulance company is normally under the operational control of the DISCOM. The air ambulance company collocates with the medical company in the DSA. It then forward deploys air ambulance teams or crews and the minimum number of aircraft to the FSMCs. The remaining aircraft stay with the company headquarters for reinforcement of the FSMC. They also provide evacuation support of patients to the medical company in the DSA or to a corps hospital. See Figure 5-3 for evacuation and patient flow.

SOLDIER SUPPLY SUPPORT

Subsistence, water, clothing and Class II support, and welfare and comfort items are all elements of sustaining the soldier. Although not all of the above will be available on a regular basis, having them available as soon as the mission permits is critical in CSS planning. Figure 5-4, page 5-9, depicts the soldier supply support players within the DISCOM chain.

SUBSISTENCE SUPPORT

Food is one of the most important factors affecting a soldier's health, morale, and welfare. However, the acquisition, storage, transportation, distribution, preparation, and serving of food has always been a logistics inhibitor to operations. The Army field feeding system is based on three basic rations. The MRE is the individual combat ration. The T Ration is a group feeding ration, and the B Ration is also a group feeding ration but one that must be cooked.

As the operational situation permits, efforts are made to introduce the A Ration (fresh foods) into the theater. This requires extensive planning and coordination. Some key points planners need to consider with A Rations are refrigerated storage and distribution equipment, and the availability of ice for unit storage.

The Army feeding system is based on battalion-level feeding in divisions. Combat battalions generally consolidate field feeding at battalion headquarters level. The battalion headquarters food service section cooks A and B Rations or heats T Rations in an organic mobile kitchen trailer. This trailer is normally located in the field trains. Food is packed in insulated food

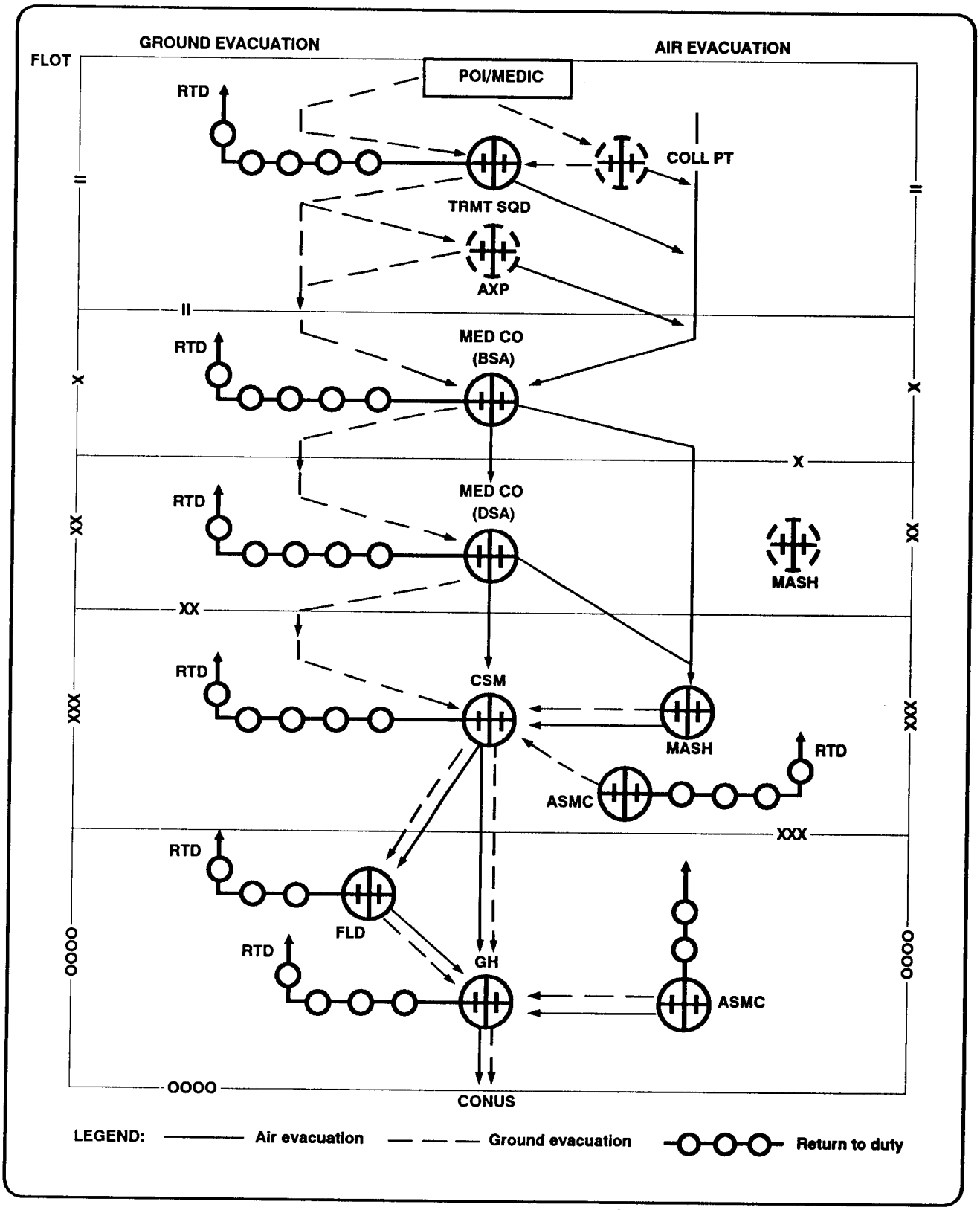

Figure 5-3. Evacuation and patient flow.

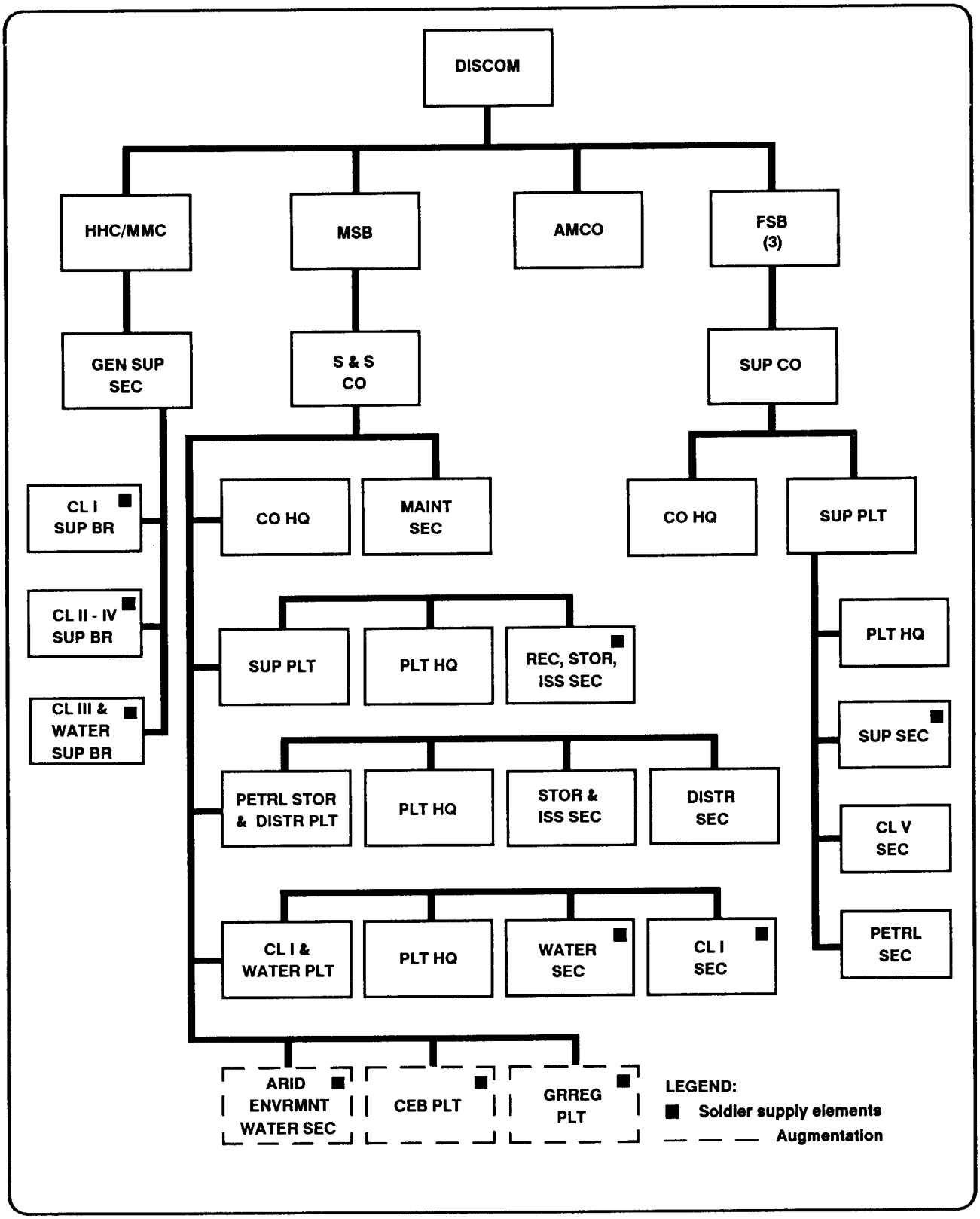

Figure 5-4. DISCOM soldier supply organization.

containers and sent with the LOGPAC to company locations where company personnel serve the meals. Food and beverage containers are sent back for reuse. Units operating in the brigade rear area are fed by their own battalions; or they maybe fed by a unit kitchen designated to feed units or personnel in their area. The same pattern is followed in the division rear. Where practicable, small units are fed by a unit designated on an area basis.

The Army field feeding standard for combat is two hot group meals and a hot MRE each day. The wartime feeding policy assumes theater-wide use of MREs for the first several days of combat with the eventual transition to the prepared T and B Rations.

The DISCOM provides Class I through the S&S company of the MSB and through the supply companies of the FSBs. Elements of these companies operate the Class I distribution points in the DSA and in each BSA. See Figure 5-5 for the DISCOM Class I organization. Normal procedures will vary somewhat when T Rations are used. The FSB company has a limited capability to store rations. Reserve rations for units in the brigade areas and for the other elements of the division are stocked in the DSA. These rations are maintained by the MSB S&S company. Figure 5-6, page 5-12 shows the request and delivery system.

The DMMC Class I section initially fills the supply pipeline using a push system. Rations are pushed forward to the DSA and BSA based on personnel strength reports, planned operations, and anticipated task organization. The DMMC Class I section converts this data to line item requisitions that are sent to the CMMC.

The Class I points verify shipping documentation with the shipment received. They also inspect shipments of rations for type, number, and condition of items received.

When the division is engaged in combat, the ration supplement-sundries pack usually is issued with the rations. Issue is to division troops and to those attached troops operating in the division area. These supplement-sundries packs should not be confused with Class VI supplies. The sundries pack is composed of items necessary to the health and comfort of troops, such as essential toilet articles and confections. This packet is made available in theaters of operations for issue, pending establishment of adequate service facilities.

WATER SUPPORT

Normally, water is provided by supply point distribution with water points established as close to the using unit as possible. However, the location of a water source and the commander's tactical plan will directly influence the positioning of water points. The Class III and water supply branch of the DMMC will manage water distribution as required. Figure 5-7, page 5-13, shows the DISCOM water organization.

The MSB is responsible for water purification and distribution. It establishes and operates water points in locations that best support tactical operations. The forward water points are normally located in the BSA. If there is no available water source, a dry point is established in the BSA. Water is transported to this point from a suitable source. If required, corps engineer teams may be requested to drill wells.

Water points should be located as close to the area supply unit as possible. From this position, water is available for issue along with Class I items. Using units usually pick up water at the water points using their organic water trailers. The MSB has a limited capability to distribute water to customers without organic water-carrying capability and to other customers in emergencies.

Water points in the DSA and BSAs may either purify water or distribute water, or both. What they do depends on the locations of adequate water sources. An adequate water source should be a consideration when selecting the brigade and division support areas. With an available water source in the support area, a water supply team is able to position equipment to purify and dispense water directly from the water purification site. If there is no adequate water source within the support area, a water team will have to set up at the nearest water source. Water is then drawn from the purification site and transported to water distribution points. These distribution points are collocated with the Class I point in the area.

CLOTHING AND CLASS II SUPPORT

Class II includes a wide variety of supplies and equipment from clothing to tools. Figure 5-8, page 5-14, shows the DISCOM Class II and map organization. The supply companies of the FSBs issue Class II to units in the maneuver brigade area. The S&S company of the MSB will issue Class II to units in the division rear. The division does not ordinarily carry reserves of Class II because of the bulk of the items and the fact that they impede division DSU mobility. The ASL contains a small reserve through the application of a safety level.

Units in the brigade area submit their requests for

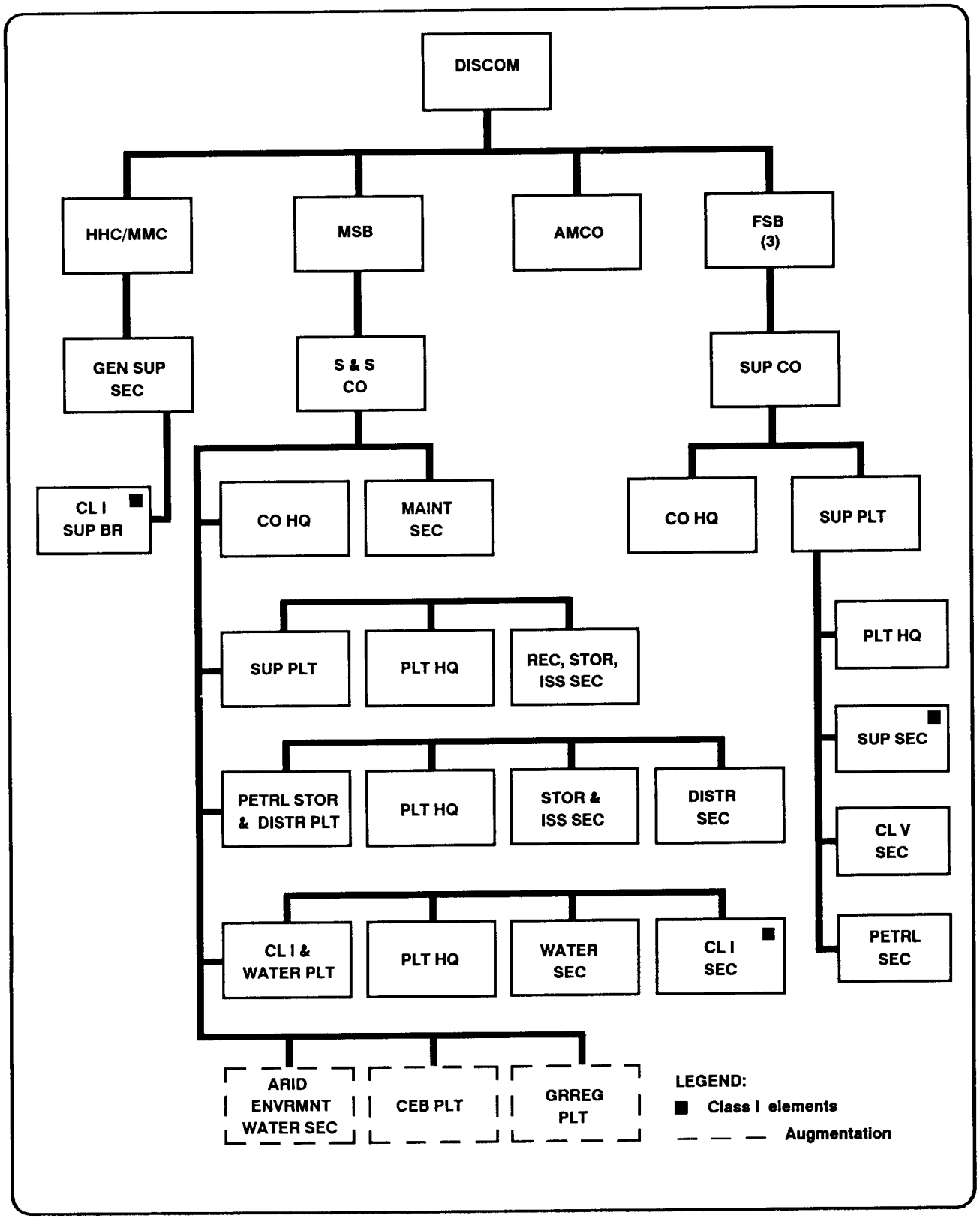

Figure 5-5. DISCOM Class I organization.

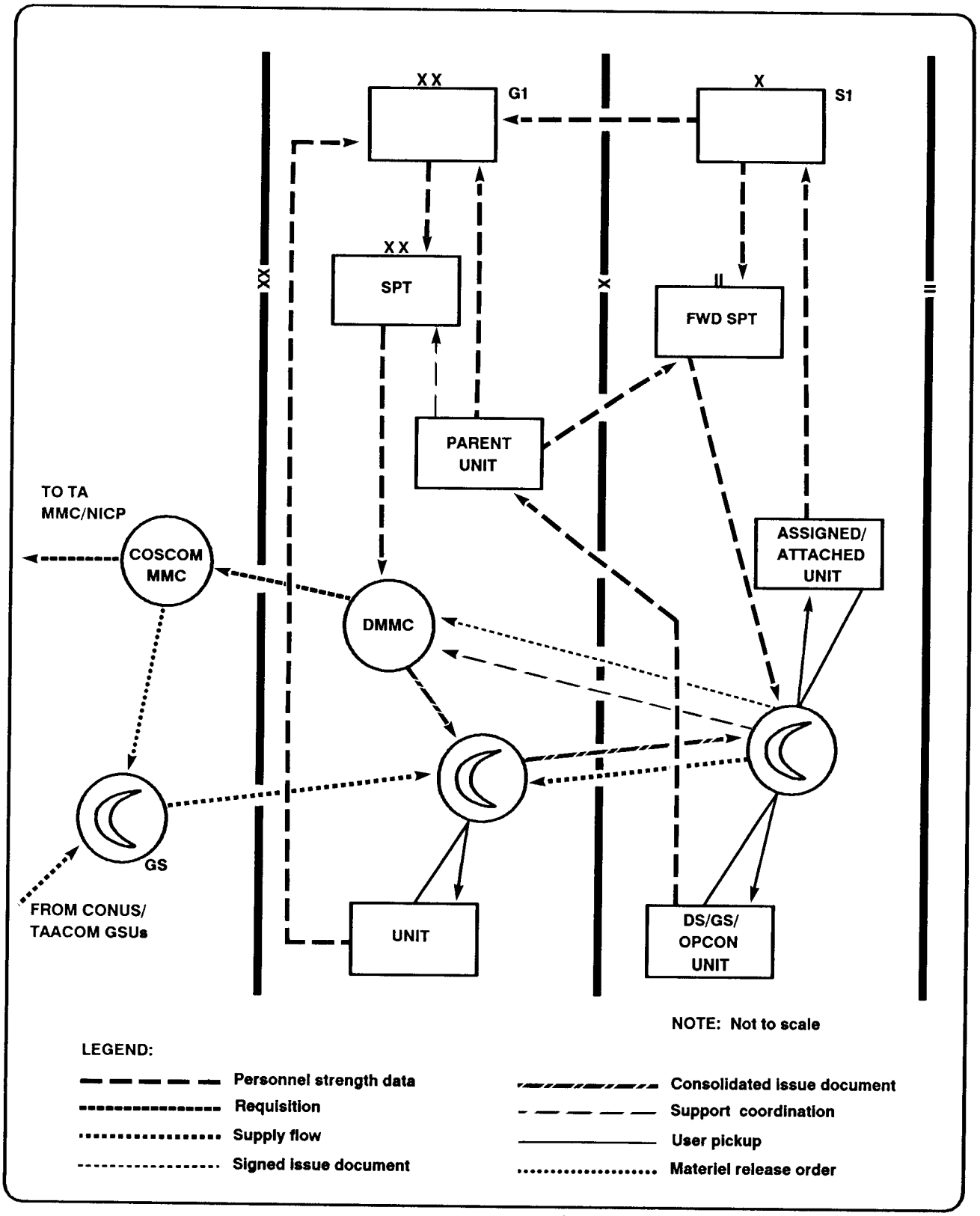

Figure 5-6. Request and delivery of Class I supplies.

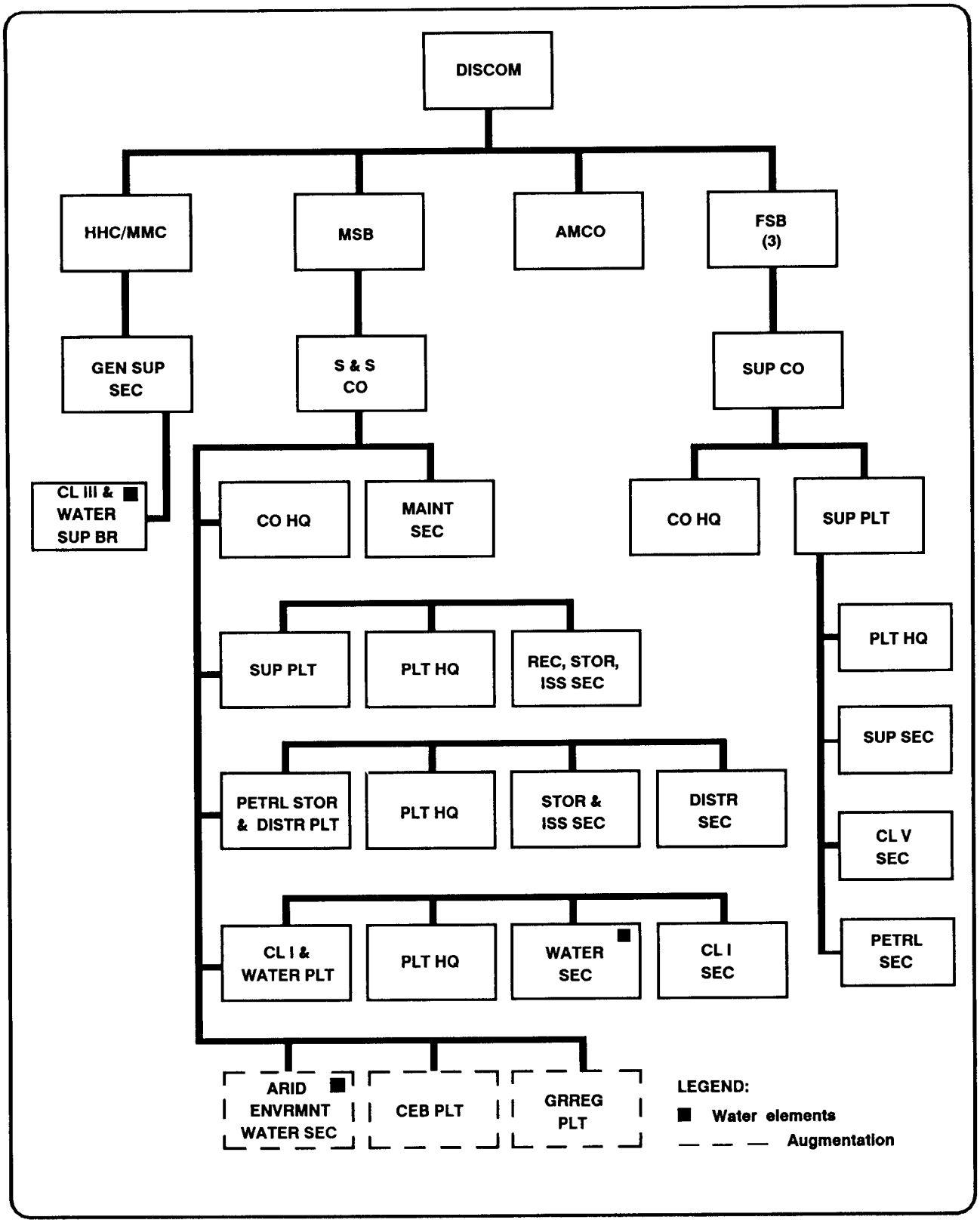

Figure 5-7. DISCOM water organization.

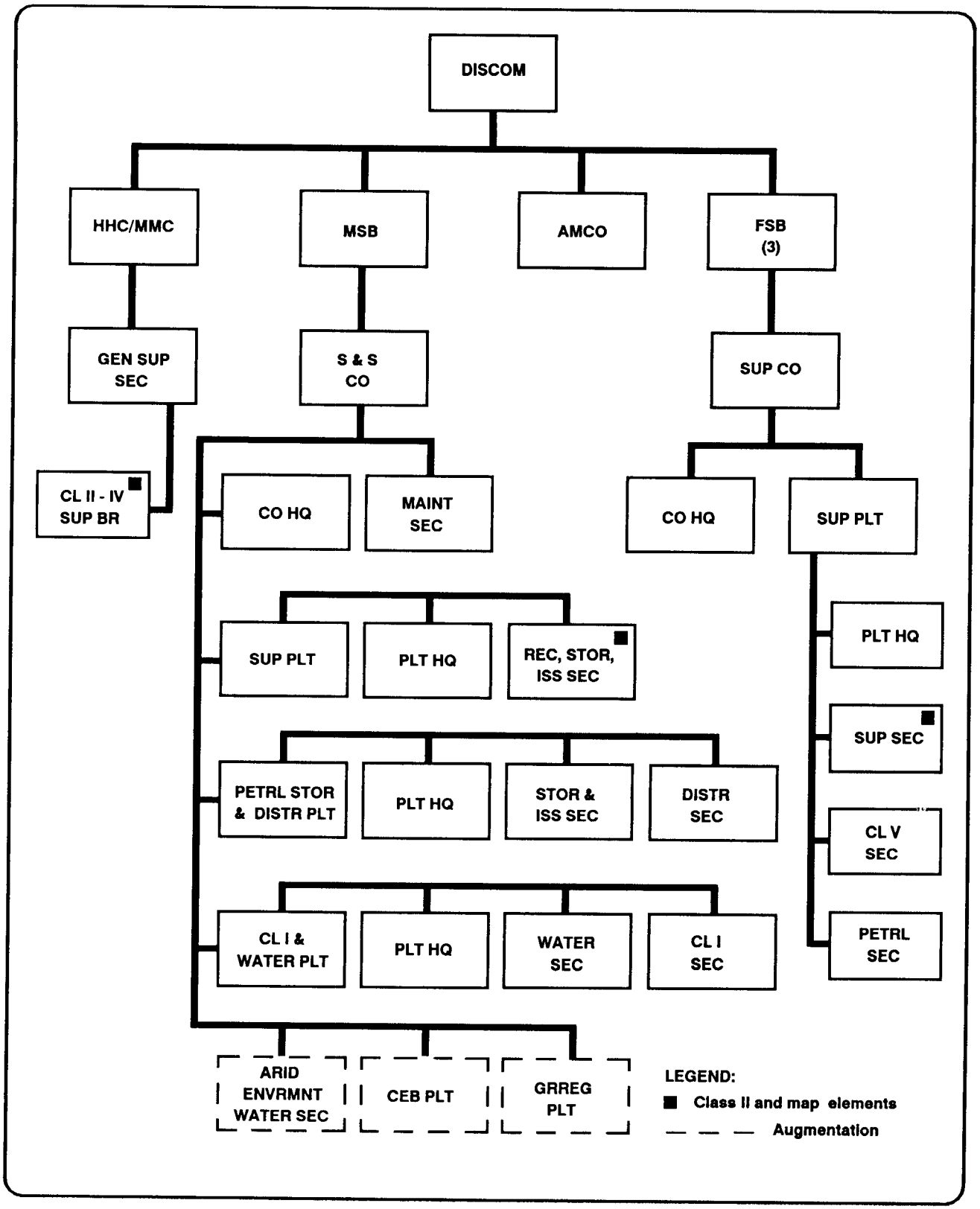

Figure 5-8. DISCOM Class II and map organization.

Class II items to the forward distribution point in the BSA. If the forward distribution point has the item on hand, it issues the item to the customer. Notification is then sent to the DMMC of the issue. If supplies are not on hand at the forward distribution point, the FSB sends the request to the DMMC. Personnel in the Class II-IV supply branch of the DMMC check their records. If they find the items are on hand in the main distribution point in the DSA, they direct the main distribution point to send the items to the forward distribution point near the user. The DMMC with the support operations branch can also direct cross-leveling of items from one FSB to another. If DMMC personnel do not find the supplies in the division, they request the items from the next higher supply source. For units in the division rear, similar procedures are used and support is provided by the MSB. Figure 5-9 shows request and delivery procedures for Class II. (The same procedures are used for Class III [packaged] and IV items.)

The supporting COSCOM activity delivers Class II, III (packaged), and IV supplies to the main distribution point in the DSA. Items not in stock in the FSB will be processed in the MSB and shipped to FSBs for issue to the requesting unit.

The limited stockage of Class II items may include MOPP gear, environmental protection items (boots, overshoes, parkas, helmets), and mechanics' tools. Distribution plans for protective clothing and equipment must consider the threat and the service life of protective overgarments and falters. Unit priorities for issue must be established.

The MSB S&S company or, if appropriate, the gaining unit's supply element, reequip soldiers returning to duty from MTFs in the division rear area. The FSB may reequip RTDs in the brigade area. If the gaining unit has support elements operating in the vicinity of the MTF (for example, a field train in the BSA with the clearing station), SOP may require that the unit bring personal equipment when it picks up personnel returning to duty. If the gaining unit does not have elements operating near the MTF, SOP may require medical personnel to pick up clothing and essential protective gear at the supply point to provide minimum protection before the soldier returns to duty. The MTF cannot issue individual weapons.

PERSONAL WELFARE AND COMFORT ITEMS

Class VI supplies are those items used for personal hygiene, comfort, and welfare. They include such things as candy, gum, dental care products, soap, and stationery. Initially the soldier carries these personal items with him. As the supply system adjusts to demand, resupply is by sundry packs where personal demand items are issued gratuitously. Sundry packs, as already mentioned, are issued with Class I items. When the situation permits, mobile PX sales teams provide services to specified units or to troop concentrations.

MAPS

The allocation of unclassified maps is determined by the division G3. The DMMC manages and consolidates requirements and places bulk orders for these maps. Unclassified maps are stored at the MSB. Units order maps from the DMMC through their supporting supply company. The DMMC directs the distribution point to issue the ordered maps if the requests meet G2 requirements. The maps requested must have been identified by the G2 as authorized for the unit. The amount requested must not exceed the G2-established distribution scheme for that map. When units request maps that have not been allocated by the G2 or that exceed the G2 distribution scheme, they must get approval from the G2 prior to the DMMC taking action. Unclassified map requirements of the divisions are submitted to the COSCOM MMC. The DS supply company provides DS map support to nondivisional units on an area basis and on a GS basis to the division.

Classified map requirements are submitted through command channels to the appropriate intelligence staff officer. Classified maps are ordered and distributed by the G2.

SOLDIER FIELD SERVICE SUPPORT

The field services normally provided by division personnel include clothing exchange and bath and graves registration. Other field services, such as laundry and textile renovation, are provided by the corps field service companies. Figure 5-10, page 5-17, shows the DISCOM field service organization.

Field service support requires close coordination with those within and outside the division. The support operations section/branch of the DISCOM, MSB, and FSBs and commanders of the S&S and field services companies of the corps are all involved in providing field services to the division.

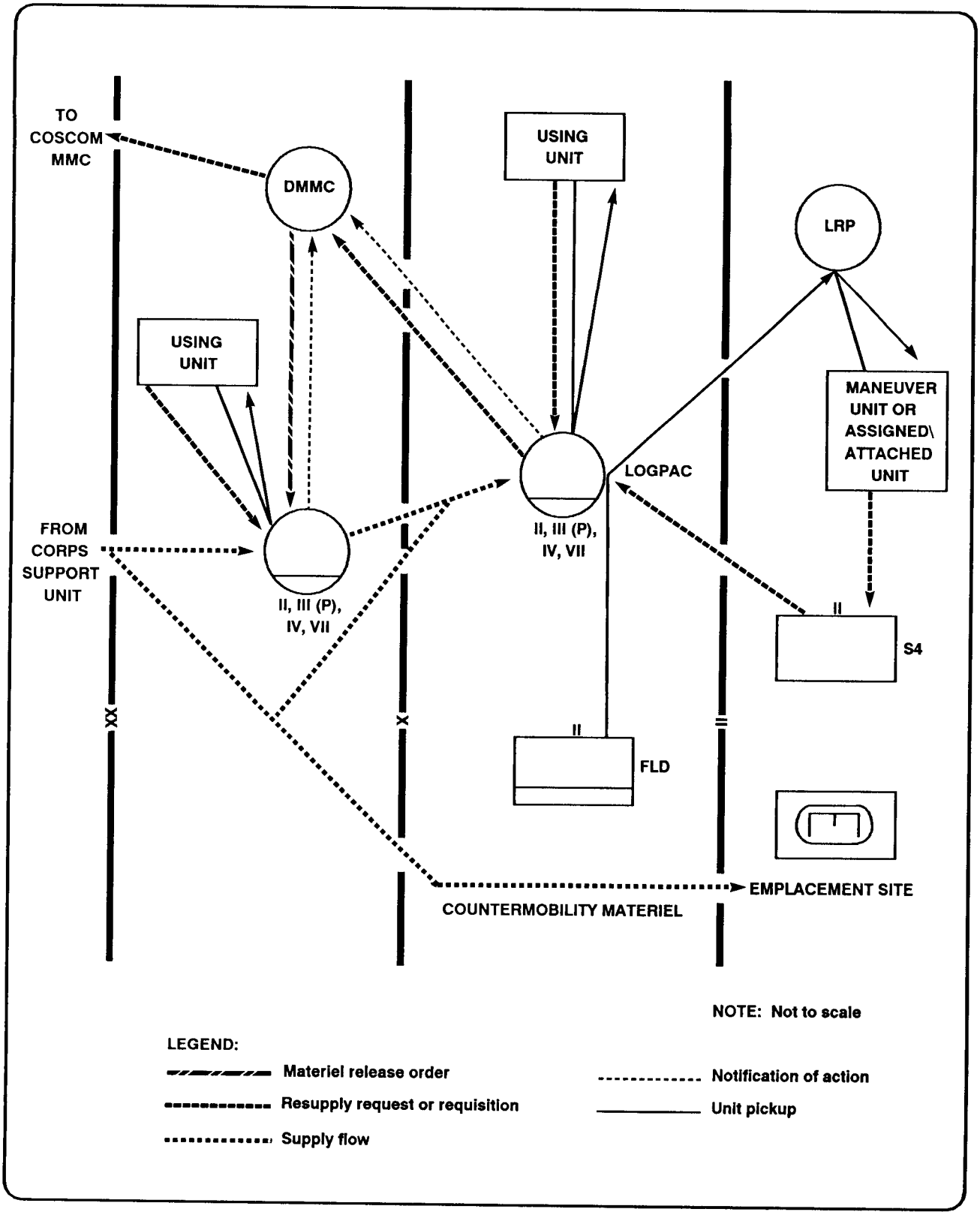

Figure 5-9. Request and delivery of Class II, III (packaged), and IV.

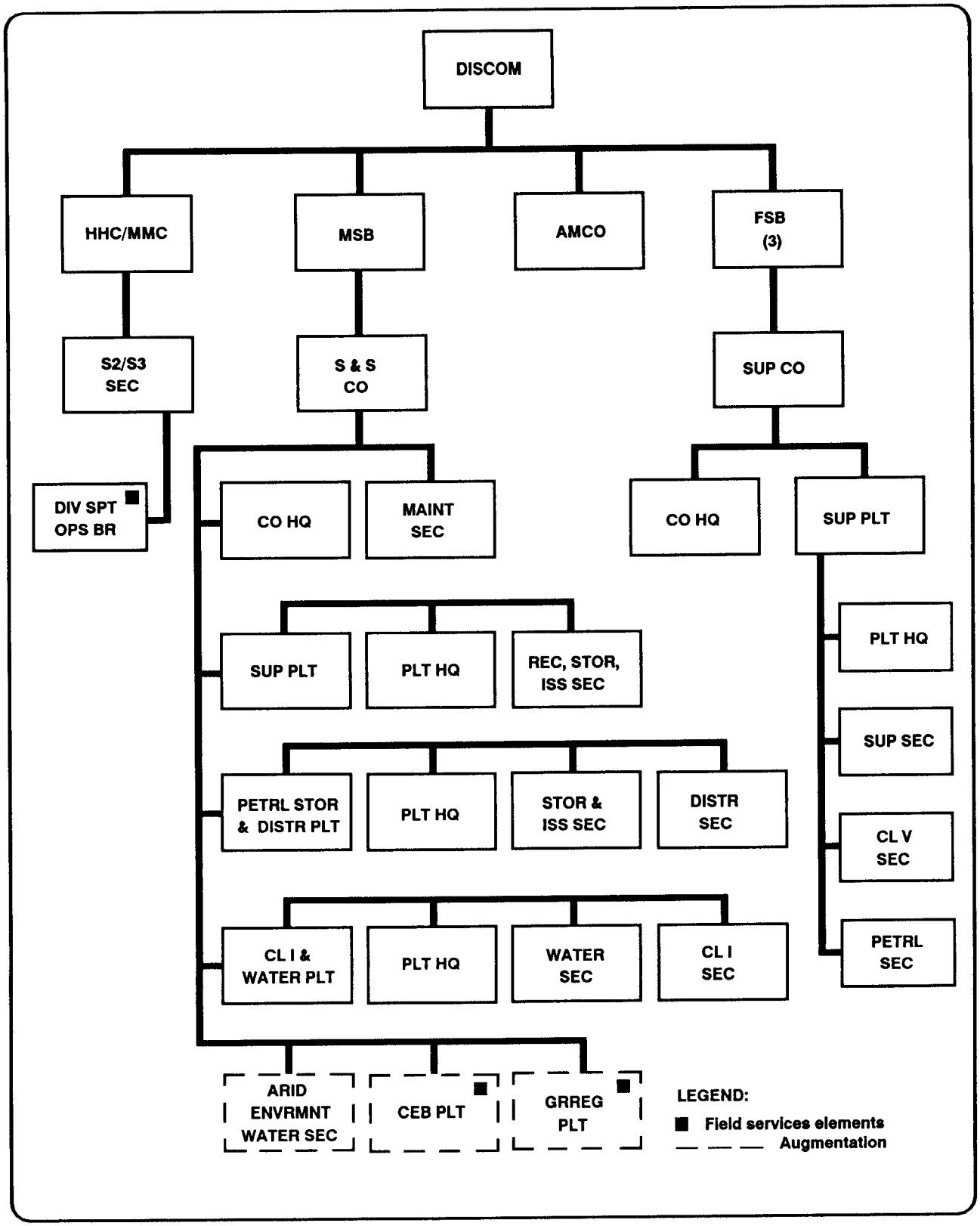

Figure 5-10. DISCOM field services organization.

CLOTHING EXCHANGE AND BATH

The corps field service company provides bath service within the division. When arrangements are made for additional operating stocks of clothing, the same company establishes a clothing exchange service at the bath points. This service is usually provided on an area basis. When clothing exchange service is to be provided along with bath service, bulk clothing stocks must be obtained from COSCOM S&S battalions. The supported unit will help the CEB teams setup the bath unit, safeguard valuables, and receive and issue the clothing.

CEB teams maybe used to assist in decontaminating personnel under the supervision of the contaminated units NBC NCO. Showers are not considered necessary in decontaminating personnel. However, they may be used, if available, as an adjunct to protective clothing exchange.

GRAVES REGISTRATION

A well-organized GRREG system in the division helps to ensure –

- Prompt and effective recovery of all remains from the division area of responsibility.
- Prompt and accurate identification of the remains.
- Prompt recovery, inventory, and security of personal effects found on the remains.
- Evacuation of the remains with their personal effects secured to them out of the division area to the corps GRREG collection point.
- Prompt, accurate, and complete administrative recording and reporting.
- Prompt and adequate care for deceased allied and threat personnel in accordance with current United Nations agreements.
- Reverent handling of remains and adequate ceremonies and services for deceased.
- Emergency burials, when required.

During wartime, an augmentation to the S&S company of the MSB provides GRREG support within each BSA and the DSA. This augmentation platoon receives and identifies remains and arranges for evacuation to a GRREG collection point. Deceased personnel are then evacuated from the division area to a GRREG collection point, temporary cemetery or mortuary in the corps area.

The division collection, identification and evacuation section of the GRREG platoon operates the division collection point. The GRREG collection point is located a short distance from the MSR near the medical supporting facilities. It is isolated from other support activities in the DSA. It is the unit commander's responsibility to search, recover, and tentatively identify the deceased personnel of the unit. In accordance with AR 600-8-1 and AR 638-30, the unit is responsible for evacuating all deceased personnel from the company area of operations.

Collection and evacuation sections of the GRREG platoon establish collection points in the BSAs to receive deceased personnel from combat units and local units in their support areas. The GRREG collection points establish tentative identification procedures. They also initiate the required reports and records that will accompany deceased personnel. They then arrange for the evacuation of the deceased to the division collection point. All personal effects found on the remains remain with the deceased when evacuated to the division collection point. The GRREG platoon provides technical advice and assistance when possible.

Deceased personnel are recovered and tentatively identfied as early, as completely, and as accurately as possible by the unit. The unit also evacuates deceased personnel and their personal effects to the GRREG collection point. Evacuation will be from the forward areas and the unit aid station when necessary.

Emergency burials in the division area are resorted to only in extreme emergencies and when authorized by the theater commander. These burials are fully documented and promptly reported through GRREG channels.

Due to the possibility of heavy fatalities in an NBC attack, the use of regular GRREG burial methods may be impossible. In such cases, mass burials may be required to reduce the time between the recovery and the burial of the remains. Permission for mass burials comes from the joint mortuary affairs office in the theater, with the approval from the theater commander.

Normally the GRREG officer of the organization requiring mass burials gets permission directly from the theater mortuary affairs officer. If there are no GRREG units in the area and contact with higher headquarters is lost, the senior officer in the area makes the decision to bury. These mass burials are to be performed in accordance with PM 10-63, Chapter 6. In an NBC situation, specific GRREG task

groups may be formed. When provided with sufficient support, these groups have the means to either evacuate or perform mass burials of the deceased personnel.

LAUNDRY AND RENOVATION

Division troops are provided laundry and renovation support as soon as the tactical situation permits. Laundry and renovation support is provided by the corps field service companies.

This support requires close coordination between those within and outside of the division, The support operations branch/section of the DISCOM and the MSB/FSB, the commander of the S&S company, and the corps field service companies are involved in providing laundry and renovation service. FMs 10-280 and 29-114 describe day-to-day laundry and renovation operations.

Chapter 6

Arming the Force

CONTENTS PAGE

CLASS V SUPPORT ORGANIZATION 6-1
CLASS V SUPPORT OPERATIONS 6-1
CLASS/BARRIER Materials 6-5

CLASS V SUPPORT ORGANIZATION

A responsive ammunition supply system provides the combat user with the required quantities and types of ammunition. The flexibility of the system ensures that this ammunition is provided at the time and place it is needed. The maneuver-oriented ammunition distribution system provides this capability. The objective of MOADS is to deliver 100 percent of the ammunition requirements of users through supporting ammunition transfer points. Figures 6-1 and 6-2 depict the key players responsible for performing the ammunition support mission within the division under MOADS.

The Class V supply system is a continuous refill system. Stocks issued to the user are replaced by stocks moved up from the rear area. The Class V supply section of the DMMC maintains records of ammunition allocations, receipts, quantities on hand at ATPs and expenditures for division units. It coordinates activities of ammunition transfer points and provides technical assistance and advice on ammunition management to division units. This section includes the DAO and DAO representatives who operate at each ATP.

The DAO serves as chief of the Class V supply section. The DAO coordinates and controls the use of Class V supplies for the division. He monitors required supply rates as provided by the G3. He and his representatives enforce controlled supply rates determined by the G3 and G4. They also approve ammunition requirements for users. The DAO also provides staff coordination for the operation of the ATPs through his representatives. This includes the ATP operated by the DS ammunition company. Chapter 3 contains additional responsibilities of the DAO and the rest of the Class V supply section.

The supply company of each FSB supports the arming system through the Class V section of its supply platoon. This section operates one ATP in the BSA to provide support on an area basis to division and corps units in support of the division as directed by the division commander.

The DS ammunition company also plays a significant role in the Class V distribution flow for the division. The ATP section of this company operates an ATP in the division rear. The operations of this ATP are the same as those for the forward ATP. However, under MOADS, this ATP provides the division commander an additional ammunition capacity (approximately 1,000 short-tons per day) to be used as required. The section retains stand-alone and high-volume, high-tonnage transload capabilities while increasing the division commander's flexibility to position ammunition to support the battle plan. Typical missions may include –

- Establish an ATP in the division rear to support units in that area and to reinforce the main effort brigade ATP.
- Establish a forward ATP along a deep attack axis of advance.
- Establish a secondary ATP for resupply operations during division passage of lines or nonlinear operations.

In addition, the DS ammunition company can operate up to three ASPS in the division rear. The company provides ammunition support to a division while remaining under the command and control of the COSCOM ammunition battalion located in the corps rear area. FM 9-6 contains additional information on the DS ammunition company.

CLASS V SUPPORT OPERATIONS

MOADS uses a concept for ammunition requisitioning, delivery, and management called combat configured loads. MOADS also increases the capability of the direct support ammunition company. Figure 6-3, page 6-3,

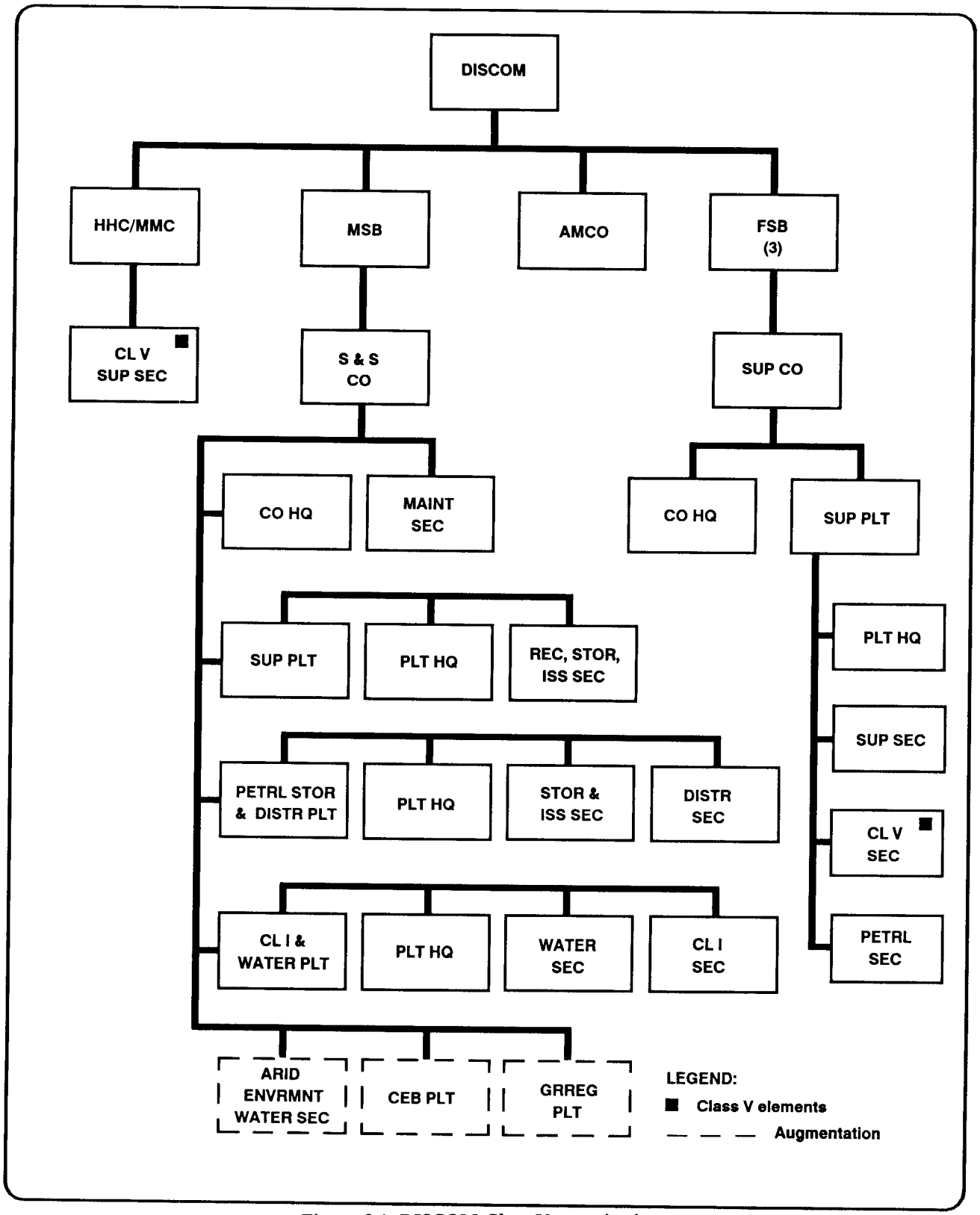

Figure 6-1. DISCOM Class V organization.

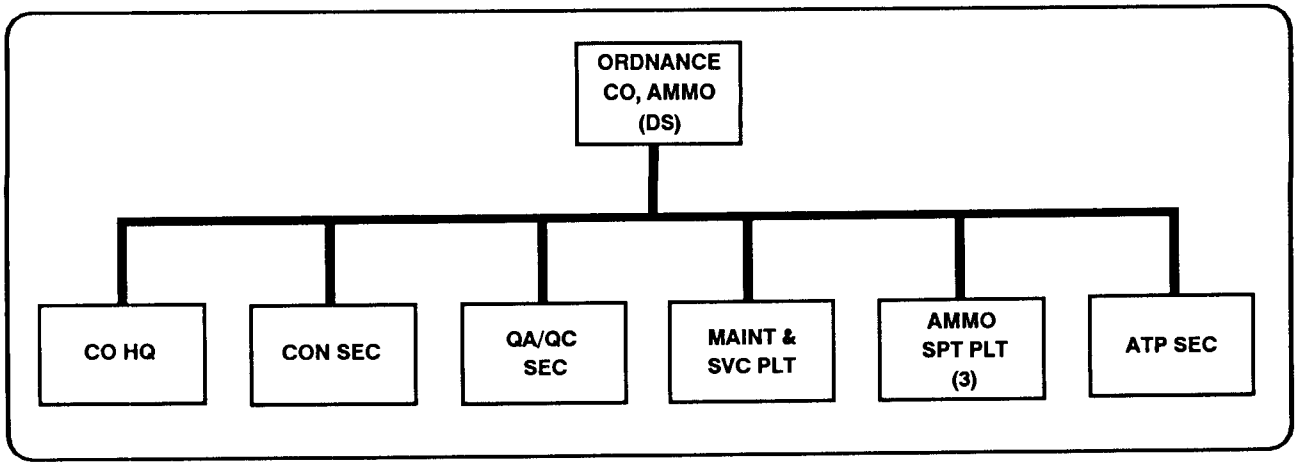

Figure 6-2. Nondivisional DS ammunition company (MOADS).

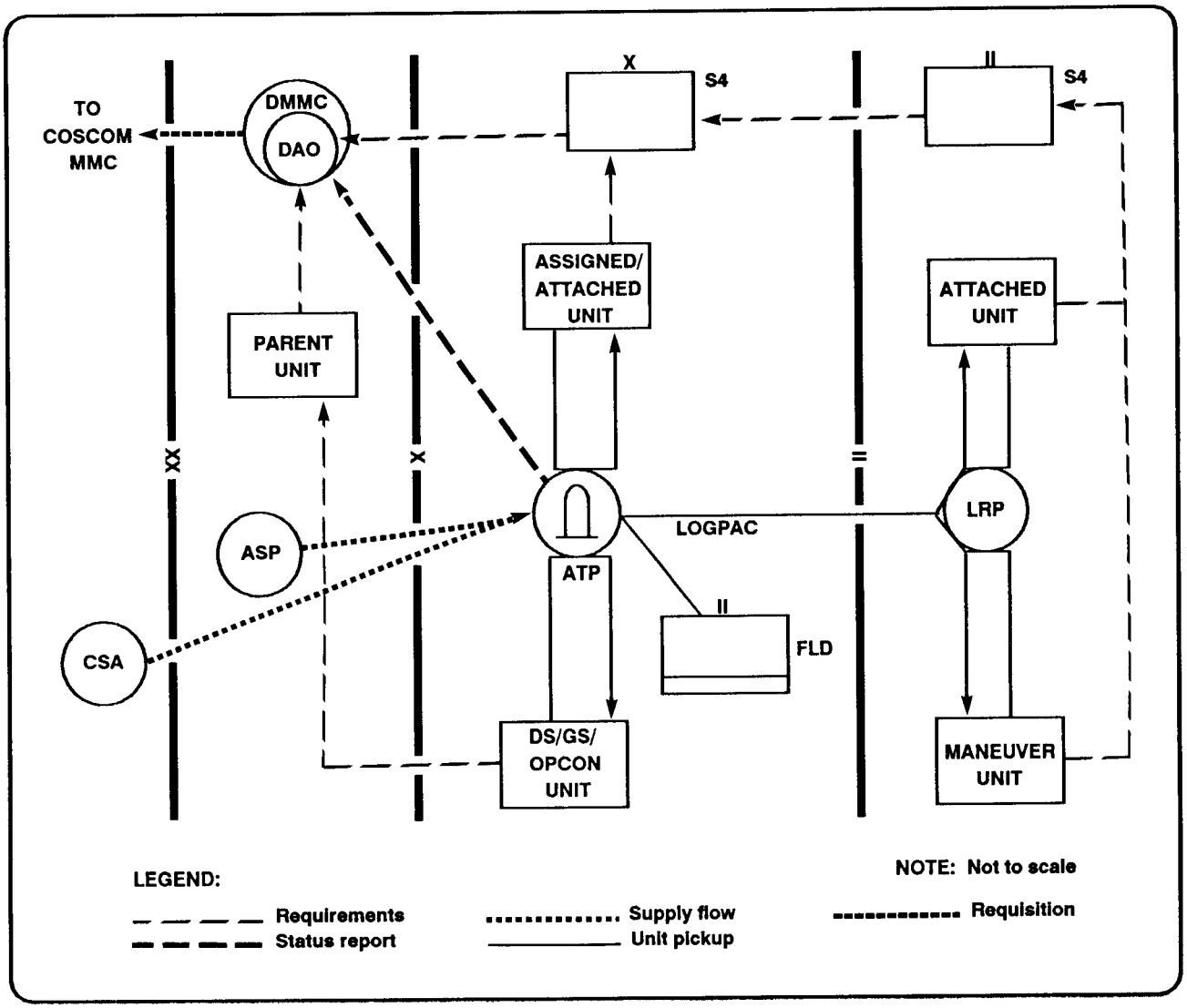

Figure 6-3. Class V supply.

illustrates the typical conventional ammunition support structure under MOADS.

Each maneuver battalion S4 transmits ammunition requirements for organic and attached units through the brigade S4 to the DAO representatives. Division units not attached to the maneuver brigades coordinate with the DAO at the DMMC for ammunition support. The DAO is responsible for designating the ATP or ASP where division and corps units not assigned or attached to brigades will receive ammunition support.

The division commander determines the quantity of ammunition to be shipped to each brigade based on planned operations the current CSR, and the brigade and division artillery commanders' ammunition requirements. The DAO then coordinates with the CMMC for the required and authorized ammunition to be shipped to the designated ATP for pickup by the using unit. The DAO notifies the ATP representative and brigade and division artillery S4s of inbound ammunition shipments. The brigade and division artillery S4s are responsible to notify subordinate units when and where to pick up ammunition. In some situations, the DAO may designate an ASP rather than an ATP to provide more responsive ammunition resupply to units operating in the division rear. The need to rapidly rearm units that have exhausted all or most of their basic load ammunition may frequently require resupply from an ASP by air utilizing sling-out operations to the combat trains or unit assembly areas.

ATPs provide high-density ammunition to users as CCLs. Upon issue, users may reconfigure the ammunition into appropriate logistics packages for movement forward and distribution to unit trains and rearm points.

COMBAT CONFIGURED LOADS

A combat configured load is a preplanned package of ammunition which is transported as a single unit. A CCL is a predetermined mix of ammunition designed to support a type unit or weapon system. Maneuver battalion/brigade S4s may submit proposed CCL configurations to the DAO based on their type unit, task force, or weapon system. The DAO reviews CCL submissions and submits a consolidated division CCL request to the corps. The use of CCLs does not preclude ordering single-DODIC loads. In fact, single-DODIC loads may be required for specific missions and contingencies. The DAO coordinates with the corps MMC to ensure the necessary CCLs flow to the right ATP at the proper time.

Munitions not included in the CCLs are moved to the ATP on separate transportation assets as required from the ASP or CSA.

CCLs not only speed the passing of resupply requirements, but also improve the efficiency of DS and GS ammunition units, Personnel at storage sites continuously and routinely configure outbound shipments. Instead of planning unique loads for each resupply mission, the DS or GS ammunition unit can organize its operation to be able to rapidly prepare CCLs and quickly ship them upon direction from the CMMC.

Many combat support and CSS units normally do not consume the large quantities of ammunition which CCLs provide. Instead of CCLs, these units may operate in the maneuver brigade sector and receive various types of small arms ammunition through the ATPs from the ASPs. The non-CCL trailers carry mixed loads (5 to 20 types) of ammunition. These non-CCL trailers position at the ATPs but away from the heavy volume transload operations associated with weapon system CCLs, such as those for tanks and 155-mm howitzers. The DS ammunition company ATP operates in the same manner providing ammunition support on an area basis to units in the division rear.

ATP OPERATIONS

Infantry, armor, artillery, aviation, combat engineer, and air defense units receive 100 percent of their ammunition requirements at the ATP. The Class V section organic to each FSB supply company receives mission guidance from the DAO and responds to priorities established by the maneuver brigade commander. Each maneuver battalion S4 and other authorized customer in the brigade area transmit ammunition requirements for organic and attached units through the brigade S4 to the DAO representative at the BSA. The brigade S4 coordinates with the FSB support operations officer and the supply company commander to establish a schedule for issue of Class V supplies. The DAO representative at the ATP validates all requests before requests are filled. Signed receipt documents are forwarded to the DMMC.

As indicated above, the DS ammunition company operates the ATP in the division area. Under previous doctrine, this ATP was organic to the MSB and was normally used for field artillery resupply missions.

Under MOADS, the division rear ATP provides the required lift and transload capability associated with high volume and high tonnage of corps field artillery and MLRS ammunition. This ATP receives mission guidance and responds to priorities established by the DAO and coordinated with the DS ammunition company operations officer.

The DAO specifies which units (division, corps, or others) are to be supported by each ATP. This guidance is based on the division commander's concept of the operation. The DAO maintains constant communication with the users, the command staffs, the CMMC, and the ATPs, while coordinating ATP operations and resupply. This communication enables the DAO to anticipate the ammunition consumption of supported units and ensures ammunition is available to support user requirements.

The ATPs receive 75 percent of the division's ammunition requirements from the CSA. The remaining 25 percent is received from the ASP. All ammunition is shipped on corps transportation assets. The CCLs issued from the CSA and ASPS make up 90 percent of the ATP's ammunition requirements. The remaining 10 percent is received as single-DODIC items from the ASP. The ATP should be near an adequate road network or MSR to ensure access for corps transportation. Once ammunition is delivered to the ATP, the trailers, minus their tractors, remain at the ATP until they are emptied by the receiving units. Ammunition is transferred from corps semitrailers to the user's tactical vehicles using the resupply vehicle MHE (for example HEMTT or MLRS) or the MHE at the ATP. When emptied, the trailers are backhauled by departing "bobtail" tractors.

To maintain coordination between the DAO and the ATPs, all ATPs are assigned a DAO representative. The DAO representative and the ATP NCO have the communications equipment capability to report, via the applicable automated ammunition reporting system, daily receipts, issues, and transactions. They also maintain contact with the DAO and the ATP NCO's respective command. Unless otherwise directed, administrative support and logistics to the ATPs are provided by the supply company of the FSB for the forward ATPs and the DS ammunition company for the division rear ATP.

ASP OPERATIONS

Ammunition supply points are alternate sources of ammunition for the division. They are not operated by the DISCOM but are normally located in or near the division rear. Specific locations will depend on terrain, mission, and threat. The ASPS may be 5 to 6 square kilometers in size. ASPS receive, store, account for, and maintain a one- to three-day supply of ammunition. This supply is geared to meet routine, surge, and emergency requirements for supported units. ASP stockage levels are based on tactical plans, availability of ammunition, and the threat to LOCs, the disruption of which may affect resupply operations.

The corps allocates ground and air transportation for ammunition movement to a committed division for a specified time or mission to operate a direct support loop from the CSA and ASPS to the ATP. Using ground transportation, the ASP can resupply the ATP in two to six hours. The use of air assets can shorten this to an hour or less. Division transportation assets assist in the emergency resupply of ammunition by moving Class V from the ASP to the ATP. In addition, it may be necessary for organic division ground and aviation assets to transport ammunition from the CSA or from out-of-sector ASPS.

CLASS IV/BARRIER MATERIALS

Class IV is construction material. This includes installed equipment and all fortification and barrier materials. Units of the division submit their requests for Class IV items through their supporting supply units to the DMMC. The DMMC will either direct issue from division assets or forward the requirement to the COSCOM MMC. The division engineer establishes barrier packages that the corps delivers as far forward as possible.

The corps supply company issues Class IV supplies. Corps transportation may deliver Class IV to the distribution point in the DSA. They also deliver Class IV directly to the forward distribution point in the BSA or to the requesting unit when directed. Construction and fortification materials are delivered as far forward as possible without transloading. Oversized loads (such as bridge timbers) maybe carried directly to the construction site.

The organization shown in Figure 6-4 highlights those sections in the DISCOM that deal specifically with Class IV. The Class II-IVsupply branch of the DMMC is primarily responsible for automated stock control for Class IV items stocked and supplied by the

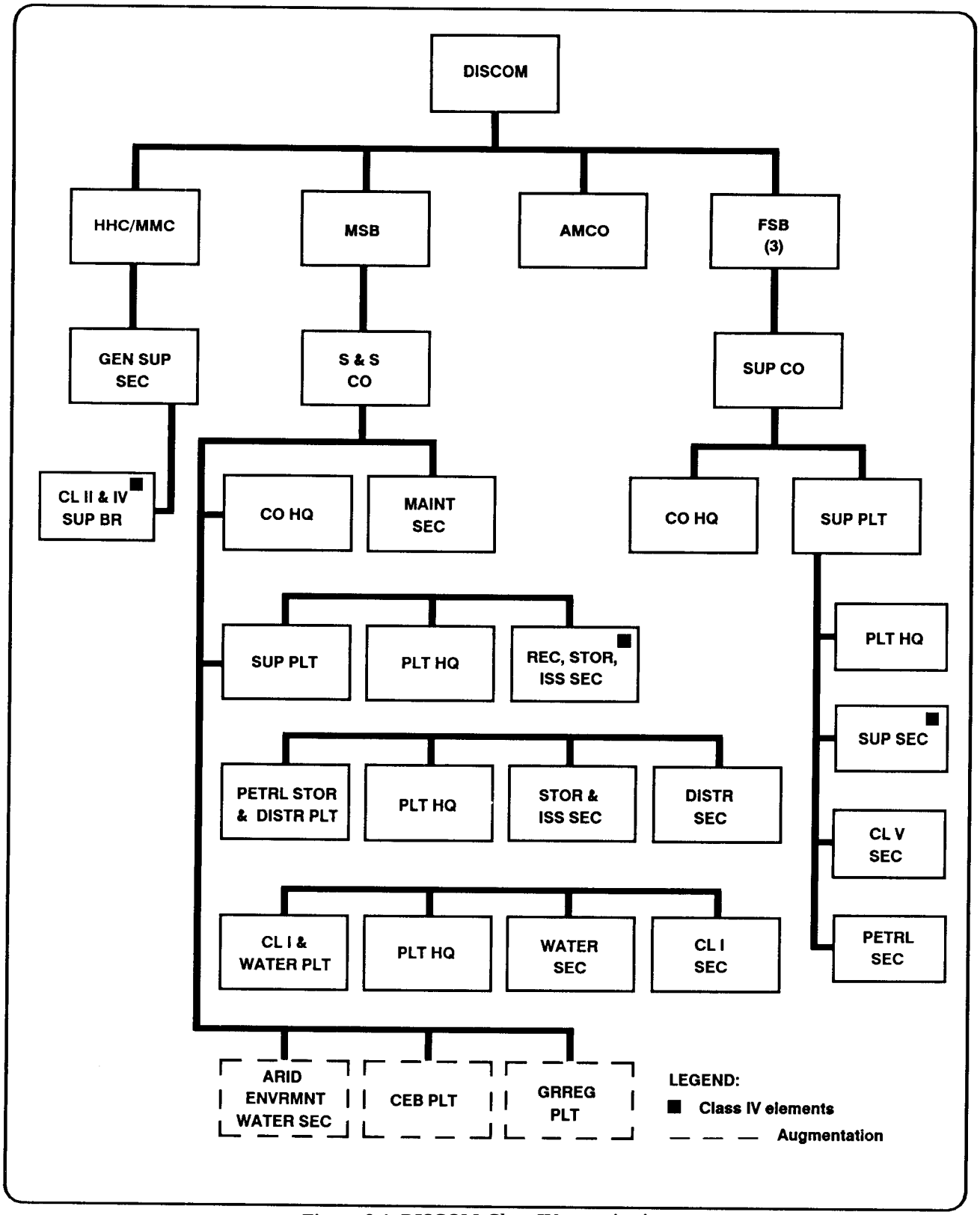

Figure 6-4. DISCOM Class IV organization.

operating units of the DISCOM. Additional information on this branch is in Chapter 3.

The receipt, storage, and issue section of the supply platoon of the MSB S&S company is responsible for preparing limited Class IV supplies for transport and delivery to the FSB supply companies. It also issues to customers in the division rear.

Because of the bulk of these materials and the limited transportation assets of the FSB, the supply company handles little Class IV material. It handles no construct ion materials. The supply company has the capability to handle limited quantities of survivability items. These are items that can be emplaced by any unit. They include such common items as sandbags and concertina wire. Requests for survivability items are processed the same as Class II items. Class II is discussed in Chapter 5.

Chapter 7

Fueling the Force

CONTENTS PAGE

FUELING ORGANIZATION 7-1
FUEL FORECASTING 7-1
BULK GROUND FUEL SUPPORT 7-4
AVIATION FUEL SUPPORT 7-4
PACKAGED PRODUCTS SUPPORT 7-4

FUELING ORGANIZATION

Class III supplies are placed in two general categories. The first is bulk fuels – motor gasoline, diesel fuel, and aviation turbine fuel. These fuels are handled by the theater petroleum distribution system. The second is packaged products–greases, oils, and lubricants. These products are handled through the same supply channels as Class II and IV items.

The organization shown in Figure 7-1 depicts those branches and sections in the DISCOM that deal specifically with the flow of Class III. The Class III and water supply branch of the DMMC controls and manages the supply of bulk fuels to division elements. It determines fuel requirements and recommends priorities, allocations, and other controls for bulk fuels. The Class II-IV supply branch of the DMMC performs automated stock control for Class III (packaged) items stocked and supplied by the operating units of the DISCOM. Additional information for both of these sections is in Chapter 3.

The S&S company of the MSB has two platoons that deal with the receipt, storage, and issue of Class III products. The receipt, storage, and issue section of the supply platoon deals with Class III (packaged) products. This section prepares packaged Class III supplies for delivery to the FSB supply companies when directed by the DMMC. It also issues packaged Class III items to division rear units. Packaged Class III supplies are requested, received, and distributed like Class II and IV items. The petroleum storage and distribution platoon, through its storage and issue section and distribution section, is responsible for bulk fuels. This platoon is responsible for providing bulk fuel direct support to all division units in the division rear and support to the FSBs' supply companies, The MSB receives fuel allocation guidance from the DMMC. See FM 63-21 for additional information on the MSB S&S company.

The supply platoon of the FSB supply company also has two sections that deal with petroleum products. The supply section deals with packaged Class III products. As previously mentioned, Class III (packaged) products are requested and distributed like Class II and IV items. The petroleum section deals with bulk fuel. It submits daily status on quantities received, issued, and on hand to the DMMC. It receives bulk fuel directly from corps and from the MSB. Deliveries are coordinated with the supply company commander through the FSB support operations officer. This section also operates a mobile filling station to provide retail service along the MSR in the BSA. FM 63-20 contains additional information on the FSB and the role the supply company has in the distribution of Class III in the forward areas.

FUEL FORECASTING

The supply of bulk fuel into the division area is based on a forecasted requirement generated by consumers. The division G4 establishes the frequency of forecasts. The G4 directs when forecasts must be submitted and the period that they are to cover.

The maneuver brigade S4, in coordination with the FSB support operations section, is responsible for totaling forecasts from customers in the brigade area. The brigade then forwards these forecasts to the DMMC. All forecasts are sent to the brigade S4. This includes those forecasts from combat support and CSS units operating in the brigade area. Thus, the S4 forecasts show the needs of all units operating in the brigade area. The brigade S4 provides the FSB with a copy of his

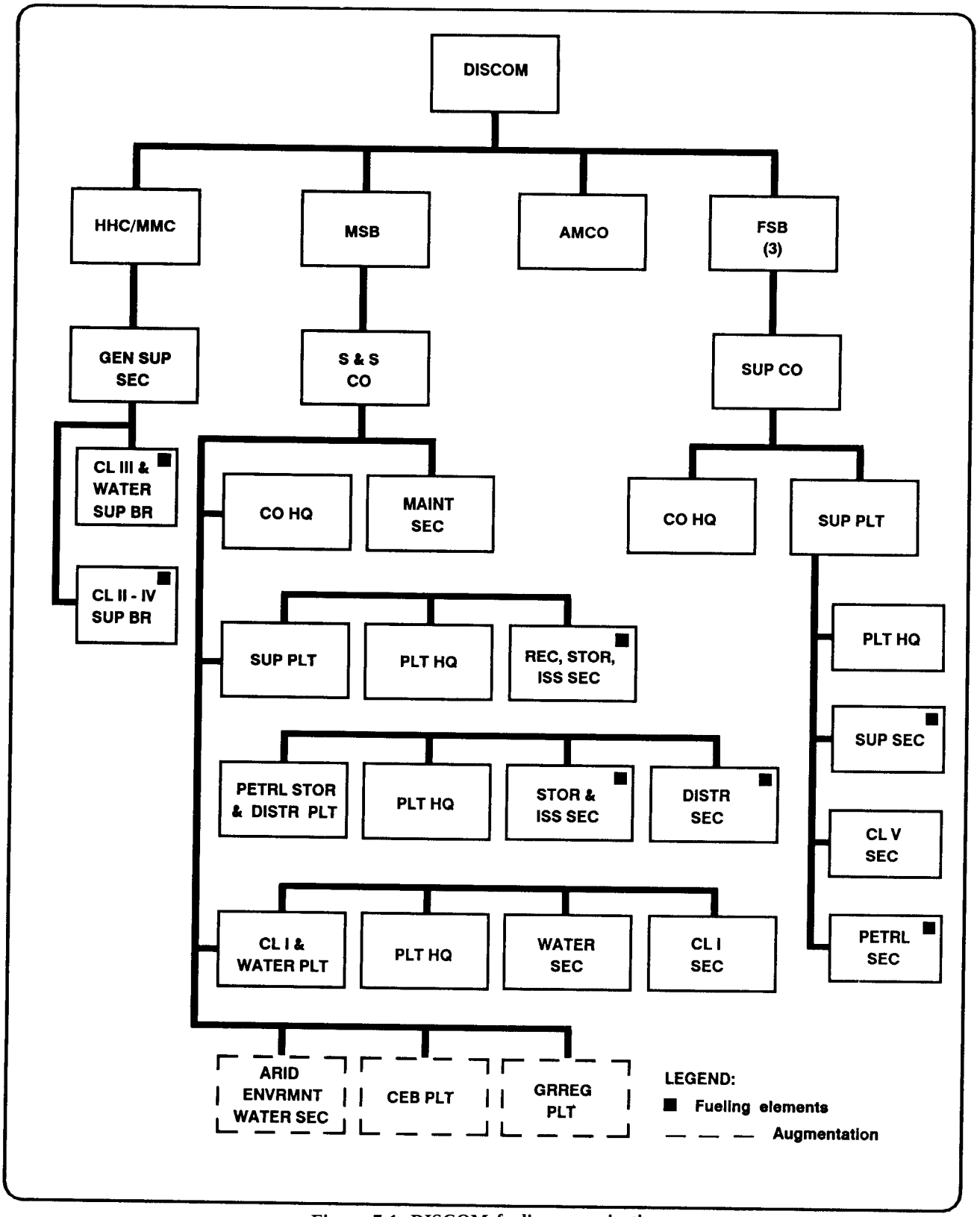

Figure 7-1. DISCOM fueling organization.

forecast. The S4 also provides his forecast to the division G4 who acts on it if fuel allocations are in effect.

Units operating in the division rear report their requirements through their S4 channels to the MSB. The exception to this procedure is the AB which submits requirements directly to the DMMC. Units also provide a copy to the division G4 for his use if allocations are in effect. Based on the forecasts received from the S4s of customer units, the MSB transmits the consolidated forecast to the DMMC. The DMMC passes the consolidated division requirement to the COSCOM MMC.

Fuel may have to be allocated to meet tactical requirements. The G4 recommends allocation of fuel based on input from the G3. When the Class III officer at the DMMC gets instructions on the allocation he passes the allocation instructions to the MSB and the FSBs. Issues are made according to these allocations. Figure 7-2 shows the request and delivery flows of Class III bulk supplies.

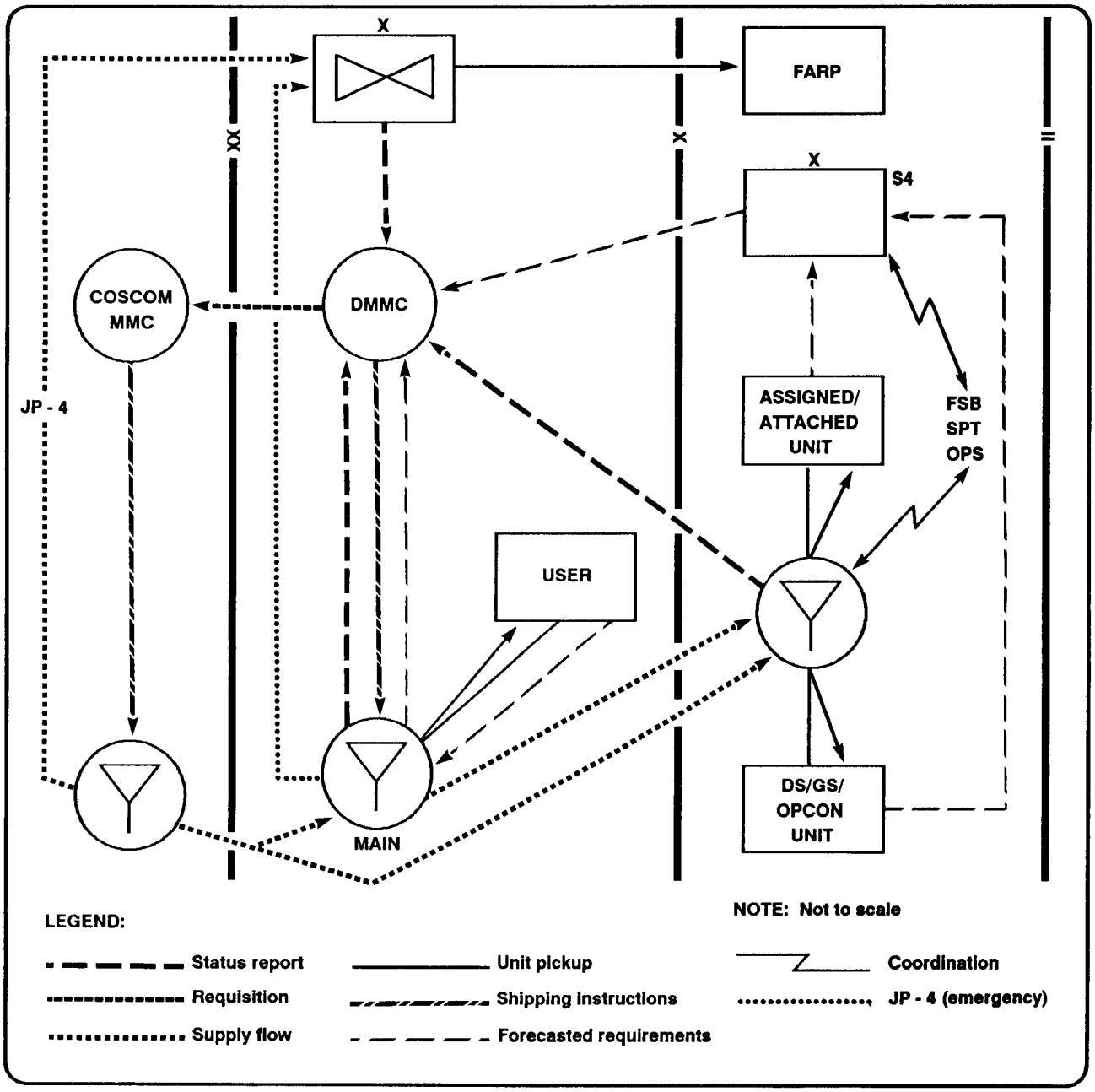

Figure 7-2. Bulk fuel supply.

BULK GROUND FUEL SUPPORT

The DISCOM receives bulk petroleum products by a ground line of communications, by air delivery, or by a combination of the two. Usually, the supporting COSCOM delivers by tank trucks and/or by rail tank cars.

The COSCOM resupplies the division with bulk fuel daily. It uses tank trucks (or railcars, pipelines, and hoselines, if available) for this resupply. Whenever possible, the COSCOM delivers bulk fuel as far forward as a forward Class III distribution point in the BSA. Bulk fuel is also delivered to the main distribution point in the DSA. Bulk fuel delivered to the MSB is discharged into collapsible storage tanks or transferred to MSB 5,000-gallon tankers. In some instances this fuel may be diverted to a forward Class III supply point. The MSB 5,000-gallon tankers also deliver fuel to the FSB Class III supply points. The MSB supports division rear units primarily by supply point distribution. Tactical units pick up fuel in a BSA with organic refueling vehicles and deliver it directly to the combat vehicles. The MSB and FSBs also operate mobile filling stations to provide retail service along the MSR in the DSA and BSAs. Fuel is dispensed to vehicles traveling on the MSR. Ground fuels (MOGAS and diesel) are provided to the AB by the MSB, primarily by supply point distribution. The FSB may supply ground fuels to aviation units operating forward, such as the cavalry squadron and attack helicopter units. Units in or deploying to areas where JP-5 or JP-8 are used as the single fuel on the battlefield can use either by simply loading it on top of the fuel currently being used. No special changeover procedure is required.

To meet armored or mechanized division requirements in emergency situations, bulk fuel may be delivered by air to the DSA. This is done by USAF aircraft employing aerial bulk fuel delivery systems. It is also done by US Army cargo helicopters carrying 500-gallon collapsible tanks, or by a combination of both.

AVIATION FUEL SUPPORT

The division aviation brigade is normally resupplied with aviation turbine fuel direct from corps. Bulk JP-4 delivered by corps is transferred to petroleum vehicles organic to aviation brigade units at predetermined locations. Aviation brigade units establish and operate FARPs and handle all aircraft refueling with organic assets.

The MSB also maintains a limited reserve stockage of aviation fuel. This fuel is distributed to the aviation brigade as required. The aviation brigade S4 coordinates with the DISCOM support operations branch for this reserve fuel. This is done when forward area units need aviation fuel support. An example would be the resupply of a FARP from a BSA. In this situation, the brigade S4 coordinates with the DISCOM to have the MSB reserve moved to the BSA. Where JP-5 or JP-8 is available, the MSB does not dedicate assets to providing a reserve for the AB.

PACKAGED PRODUCTS SUPPORT

Class III (packaged) is provided to users in the maneuver brigade areas by the supply companies of the FSBs. The MSB S&S company provides the same support to the users in the division rear. The division does not ordinarily carry reserves of Class III (packaged) stocks. The ASL contains a small reserve through the application of safety levels.

Units in the brigade area submit their requests for Class III (packaged) items to the Class III point in the BSA operated by the supply company of the FSB. If the forward distribution point has stock on hand, it issues to the customer and notifies the DMMC of the issue. If supplies are not on hand at the forward distribution point, the FSB sends the request to the DMMC. If stock is on hand in the main distribution point, the DMMC directs that the item be sent to the forward distribution point for issue to the customer. If the DMMC does not find the supplies in the division, a request is submitted to the next higher supply source. For units in the division rear, similar procedures are used and support is provided by the MSB. Figure 5-4 shows the request and delivery procedures for Class III (packaged) items.

The corps supply company (GS) issues Class III (packaged) supplies. Corps transportation delivers these supplies to the main distribution point in the DSA. The MSB processes all Class III (packaged) stocks for the forward areas. Once processed, these stocks are delivered to the FSBs for issue to the requesting units.

Chapter 8

Fixing the Force

CONTENTS PAGE

DISCOM MAINTENANCE ORGANIZATIONS 8-1
RECOVERY AND EVACUATION 8-7
OPERATIONS 8.8
COMMON REPAIR PARTS DISTRIBUTION SYSTEM 8-9
REPAIR PARTS DISTRIBUTION SYSTEM FOR THE AVIATION BRIGADE 8-11
CLASS VII/WEAPON SYSTEMS DISTRIBUTION 8-11

DISCOM MAINTENANCE ORGANIZATIONS

The DISCOM organizations shown in Figure 8-1 are responsible for maintenance and Class IX support to division units.

MATERIEL MANAGEMENT CENTER

The materiel section of the MMC manages repair parts supply and maintenance. It designs and manages the division Class IX inventory and directs Class IX issue. It oversees the document control and edit functions. The section's management is limited to the maintenance functions that are generally external to the MSB, FSBs, and AMCO. The section monitors unit maintenance throughout the division. It collects, analyzes, and reports maintenance statistics. It keeps records of the status of MWOs and compiles reports on the operational status of division equipment. The section also provides disposition instructions on all unserviceable materiel.

MAIN SUPPORT BATTALION

The primary mission of the MSB is to provide logistics and health services support for division and other designated units located in the division rear and reinforcing support to the forward support battalions. Some of the specific maintenance-related functions provided by this unit are:

- Providing division-level supply support for Class IX.
- Operating a salvage collection point.
- Providing motor transport for distribution of heavy or oversized cargo and equipment to the forward support battalions and evacuating from forward areas.
- Performing DS maintenance on all authorized equipment of the division.
- Providing reinforcing support to maintenance companies of the forward support battalions.

The primary maintenance missions belong to the three subordinate maintenance companies of the MSB.

Light Maintenance Company

The MSB light maintenance company provides DS maintenance to division units not supported by the maintenance companies of the forward support battalions. This is commensurate with stated capabilities. It also provides reinforcing maintenance for the three maintenance companies of the forward support battalions.

Except for medical items, airdrop equipment, light textiles, avionics, aircraft, aircraft armament, missiles, and ammunition, this unit provides the following

- Technical assistance to division units.
- The capability of maintaining an ASL of up to 6,000 lines. This includes the receipt, storage, and issue of common repair parts.
- Reparable exchange service for selected common repair parts.
- Quick supply store for selected common repair parts.
- Reinforcing direct support maintenance to the maintenance companies of the forward support battalions.
- On-site maintenance support of communications equipment.
- COMSEC maintenance for all units of the division, less signal and military intelligence battalion items.

The MSB light maintenance company is organized as shown in Figure 8-2. The company, when required, sends

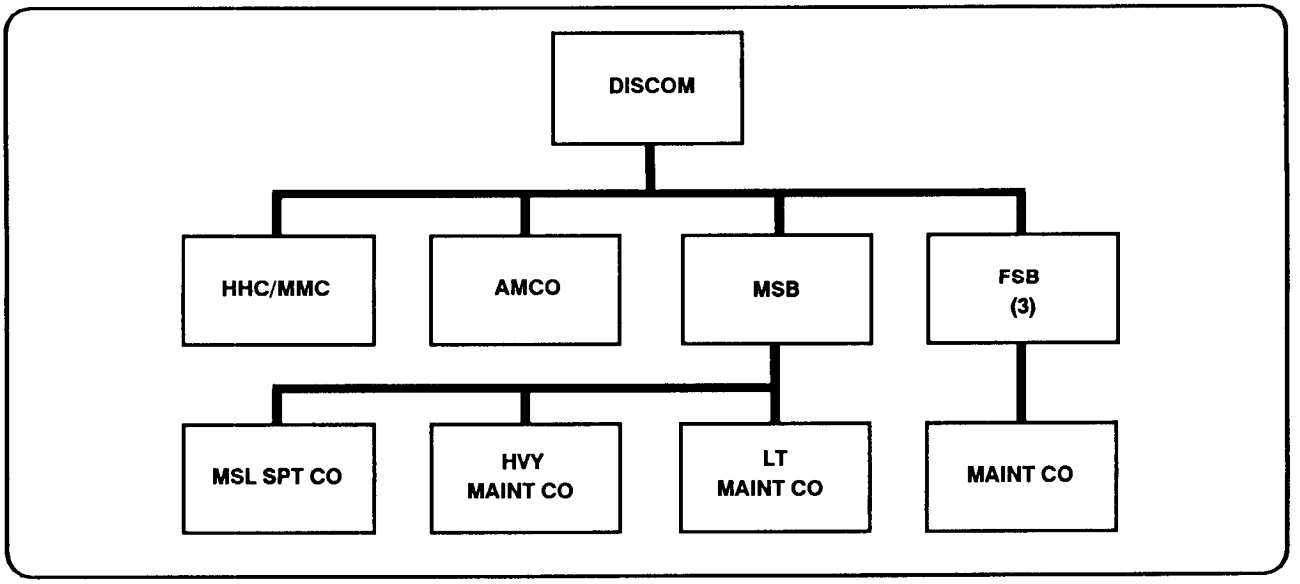

Figure 8-1. DISCOM maintenance organizations.

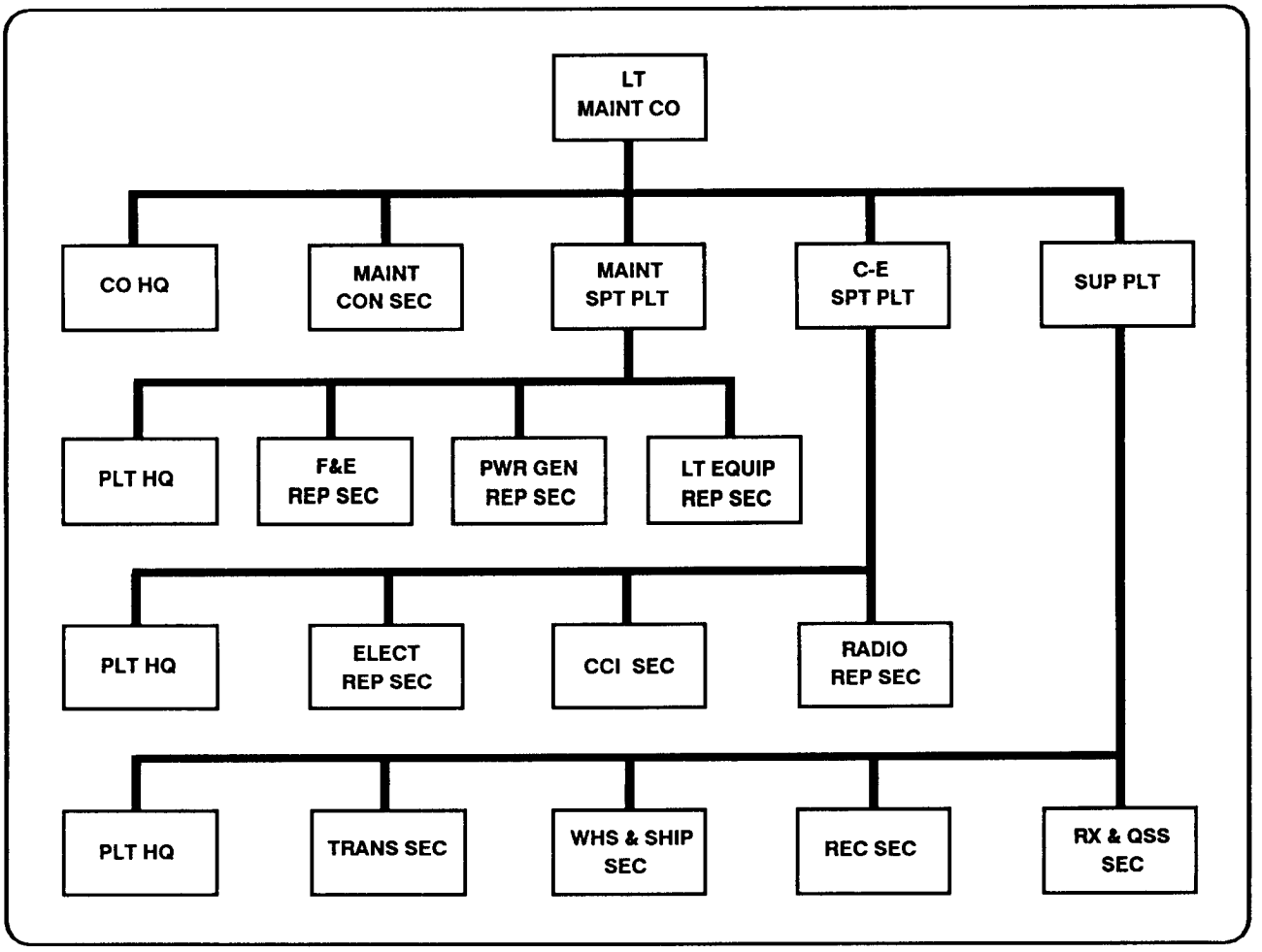

Figure 8-2. MSB light maintenance company.

MSTs into the division rear to provide required support consistent with tactical limitations and their support capabilities. For a more detailed discussion of the light maintenance company, see FM 63-21 or FM 43-12.

Heavy Maintenance Company

The heavy maintenance company of the MSB provides direct support maintenance to units within the division. Exceptions to this are medical, C-E, COMSEC, airdrop equipment, light textiles, avionics, aircraft armament, missile, and ammunition items. This DS maintenance includes metalworking, machining, and repairing of—

- Automotive equipment.
- Small arms and artillery pieces.
- Power generation items.
- Engineer equipment.
- Fire control instruments.
- Tank turrets.

This company also provides technical and recovery assistance to units employed in the division rear. It also provides reinforcing DS maintenance, less repair parts, for the FSB maintenance companies.

This company is organized as shown in Figure 8-3. Reinforcing support to the maintenance companies of the FSBs is provided by MSTs. The company also contains teams which provide support to the cavalry squadron and the MLRs unit located in the division rear. For additional information on the heavy maintenance company, see FM 63-21 and FM 43-12.

Missile Support Company

Logistics concepts for air defense and land combat missile systems are determined by two factors. These are the technical design and tactical employment concept of each system. The operational requirements and sophisticated equipment of certain missile systems dictate that the majority of maintenance functions be performed at the operational site.

The MSB missile maintenance company provides DS maintenance and Class IX supply for SHORAD systems. This includes supporting radars, land combat missile systems, MLRs, and MCTNS.

The basic organization of the missile support company is shown in Figure 8-4. This unit provides maintenance and service support for division missile weapon systems to include the following

- Base shop maintenance for all division land combat, MCTNS, and SHORAD missile/gun systems.
- Receipt, storage, and issue of Class IX supplies (approximately 3,600 lines) for land combat, SHORAD, MLRS, and MCTNS systems. This supports mission shop stock, RX, MSTs, and missile/weapon systems user requirements.
- TOW/Dragon/MCTNS DS Class IX and RX supply support to the forward support battalion maintenance companies.
- Quality assurance/quality control inspections of system peculiar equipment/TMDE maintenance and technical assistance inspections when required by user units.
- On-site repair for all missile systems not organic to brigades.

See FM 63-21 for additional information on the MSB missile support company.

AIRCRAFT MAINTENANCE COMPANY

The objective of Army aircraft maintenance is to ensure maximum availability of mission-capable aircraft. Aircraft maintenance provides maximum mission capability of total weapon systems through the accomplishment of maintenance where it can be most effectively and economically performed. The aircraft maintenance company is assigned as a separate company to the division organic to the DISCOM. The company is structured to support the aircraft assigned to the division, specifically the observation, utility, and attack helicopters. See Figure 8-5, page 8-5, for the organization of the aircraft maintenance company.

It is designed to provide the AB with AVIM and reinforcing AVUM support at its base location in the division rear. It is also designed to provide tailored repair/recovery teams in the operating unit areas.

The AMCO's main body, located with the AB, performs extensive on-aircraft systems maintenance. This maintenance includes –

- Making structural and airframe repairs.
- Repairing components for immediate reinstallation on aircraft or to support its organic reparable exchange program.
- Performing scheduled AVIM-level inspections.
- Maintaining the division Class IX (air) ASL. This is to replenish supported unit PLL stocks and support AVIM operations.

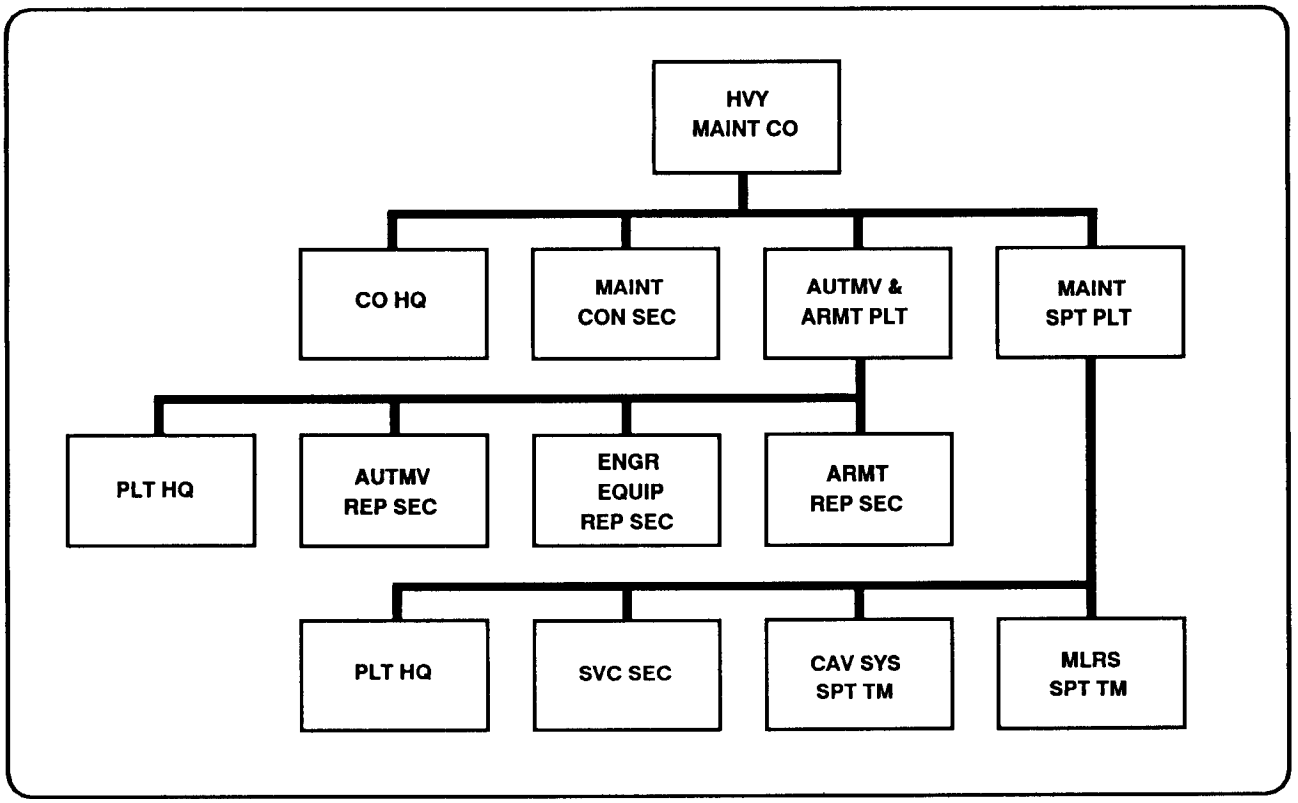

Figure 8-3. MSB heavy maintenance company.

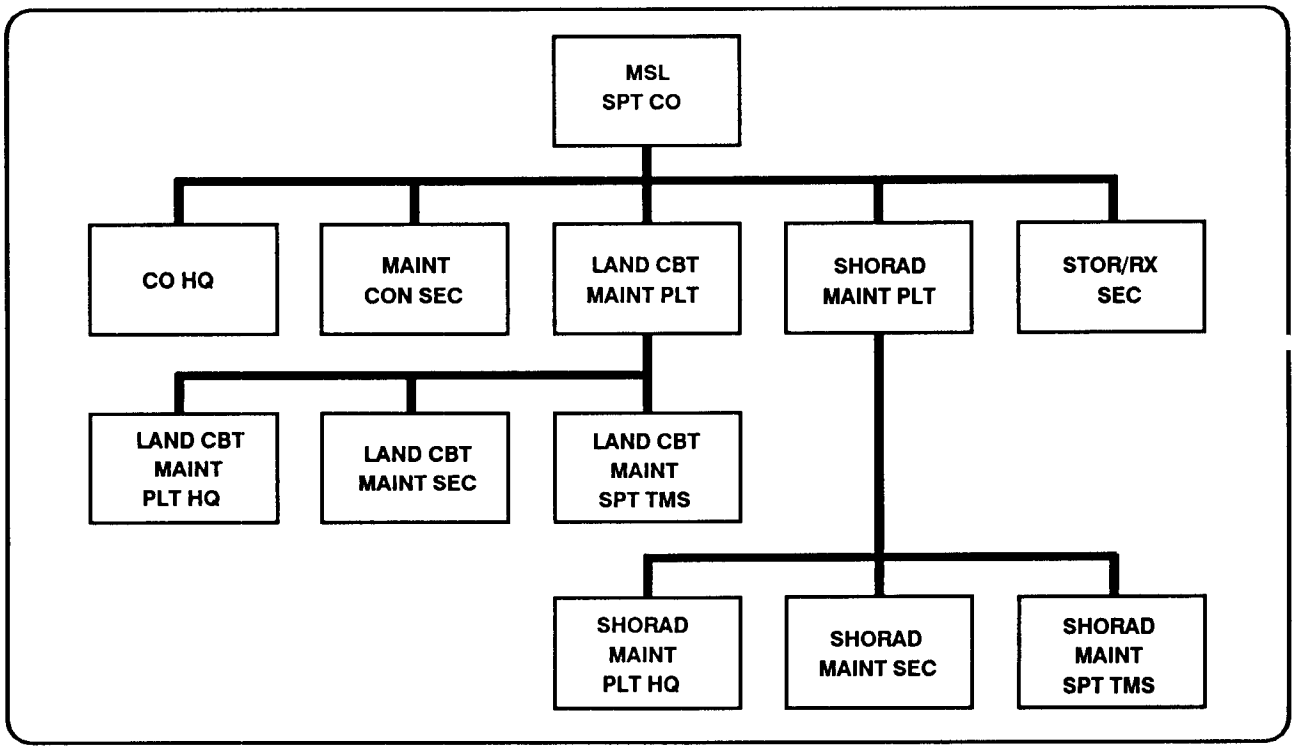

Figure 8-4. Missile support company.

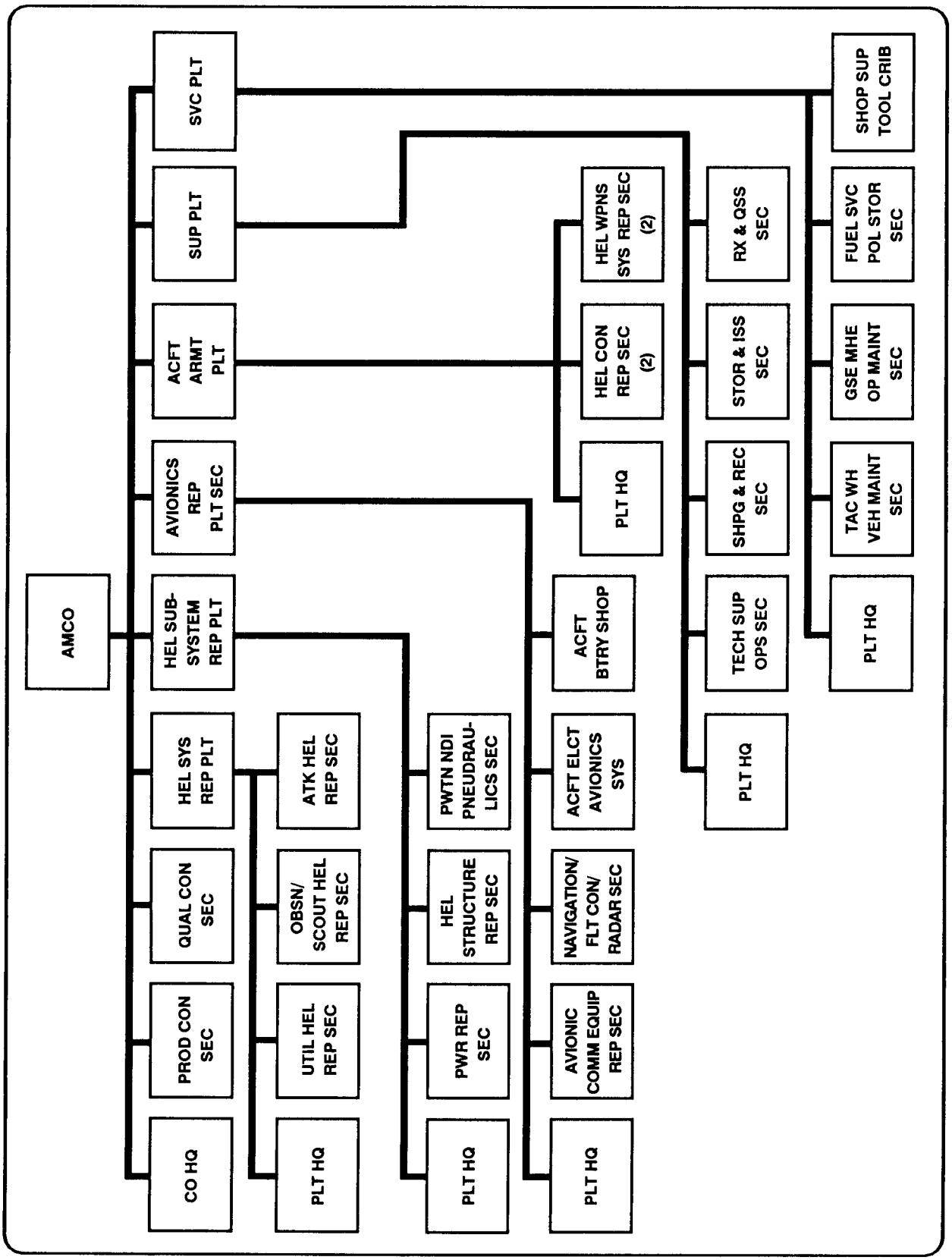

Figure 8-5. Aircraft maintenance company.

- Serving as the next-level processing agency for AB supply transactions under an automated system. This includes the receipt, storage, and issue of repair parts. It also includes the control and distribution of Army intensively managed items.

The aircraft maintenance company employs mobile, weapon-system-oriented forward repair/recovery teams to perform authorized intermediate maintenance in the forward areas.

The AMCO provides limited collection, classification, and recovery of serviceable and unserviceable materiel. It also maintains an aircraft combat maintenance/battle damage repair capability.

FSB MAINTENANCE COMPANY

The FSB maintenance company is a critical component in fixing the force. It provides DS maintenance and common repair parts service in the brigade area. The company also includes a variable number of system support teams. Each team is designed to support a tank or mechanized infantry battalion. The company receives one team for each maneuver battalion assigned to the brigade. The company performs the following functions:

- Provides DS maintenance to division and other designated elements in the brigade area. This includes repair of communications, engineer, power generation, quartermaster, chemical, and utilities equipment. It also includes repair of artillery, missile, small arms, tank turrets, track and wheel vehicles, and field artillery systems.
- Provides recovery assistance to supported units when required, consistent with limitations of METT-T.
- Provides technical assistance to supported units which perform unit maintenance within the brigade.
- Provides technical supervision of PLL supply for supported units.
- Maintains a portion of the division ASL to support the items stocked in combat PLLs of supported units. Other repair parts for which a significant demand is expected are also included on the ASL. The Class IX manager in the DMMC determines the ASL for the FSB.
- Provides reparable exchange service for selected common repair parts.

See Figure 8-6 for the organization of the FSB maintenance company.

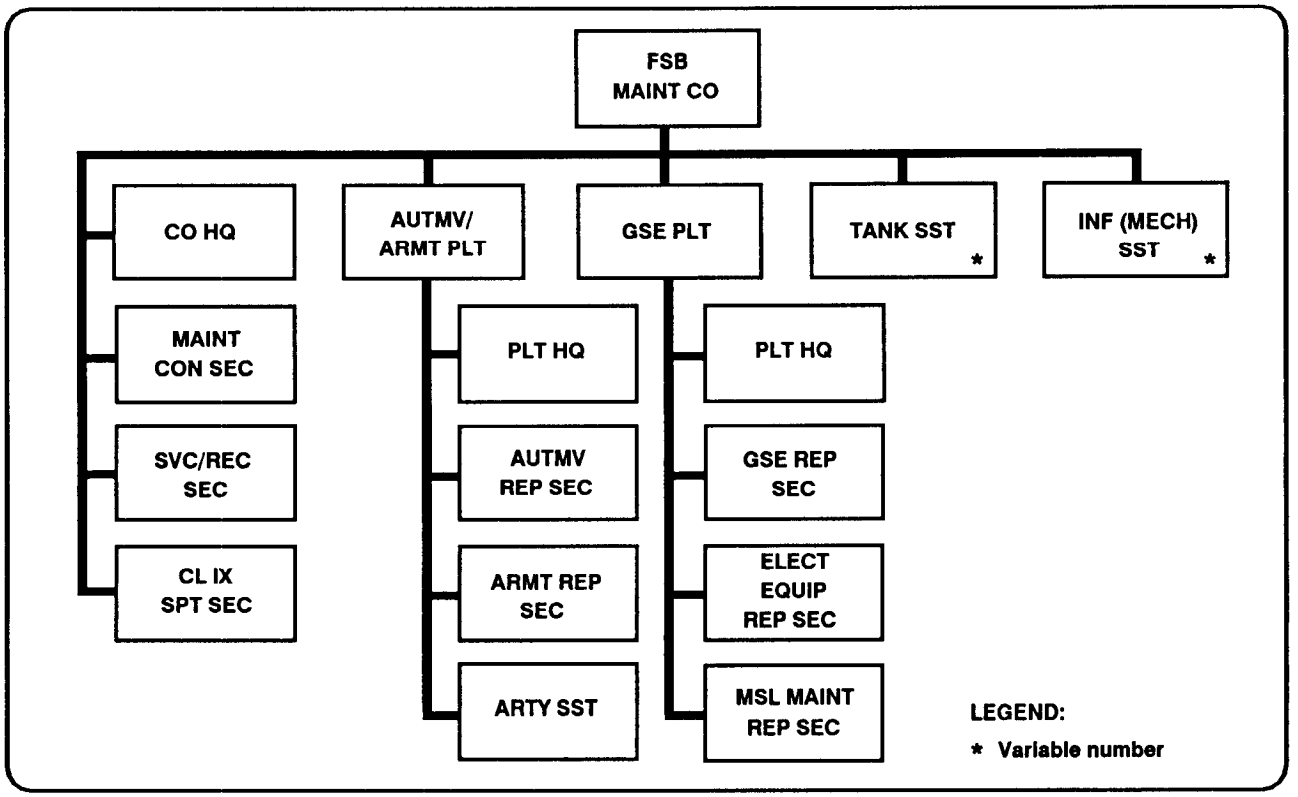

Figure 8-6. FSB maintenance company.

RECOVERY AND EVACUATION

When equipment cannot be repaired on site, it must be brought to the maintenance activity best suited to do the repairs. This is done by recovery and evacuation. Using units recover equipment to their supporting maintenance activity. The maintenance activity either repairs the item or evacuates it to another activity for repair. When transportation requirements exceed the maintenance unit capability, they request transportation support from the MSB's TMT company through the MCO.

Aircraft recovery operations must be planned and coordinated. If the downed aircraft is recoverable, the recovery officer contacts the maneuver unit on the ground to determine if time is available for recovery. If the tactical situation permits aerial recovery, the recovery officer takes action to obtain the necessary aircraft recovery support from organic assets or other aviation units with the necessary lift capability. Aircraft recovery operations employ the smallest recovery aircraft consistent with the requirements of the mission. Recovered aircraft are normally transported from the recovery point to the appropriate maintenance activity without intermediate stops. Recovery and evacuation capitalize on backhaul to the appropriate aircraft maintenance facility.

RECOVERY

Recovery is the process of retrieving or freeing immobile, inoperative, or abandoned materiel from where it was disabled. If the item cannot be repaired at the down site, it is moved to a place where it can be repaired, evacuated, or otherwise disposed of. Recovery is performed to –

- Return immobilized equipment to operation.
- Retrieve equipment for repair and/or return to use.
- Prevent enemy capture of equipment.
- Use enemy equipment for intelligence purposes or for US or allied forces.

Recovery is a using unit responsibility. Using units are organized, staffed, and equipped to recover their own equipment. Recovery operations in armor and mechanized infantry battalions are centrally managed at battalion level, usually by the BMO. The battalion maintenance platoon has recovery vehicles to provide recovery support. The platoon has company maintenance teams, each of which has an organic recovery vehicle. In other units, the motor sergeant, motor officer, or other designated individual controls recovery operations. Maintenance units may be tasked to provide recovery support on an area basis to units without a recovery capability.

Recovery is initiated by the operator or crew of the disabled vehicle. Before requesting recovery support, the operator or crew should attempt repairs and self-or like-vehicle recovery using available resources. When the tactical situation makes this impossible, recovery assistance is requested from unit maintenance. The BMO evaluates the request for assistance based on command guidance and the overall tactical and maintenance situation. The recovery mission is assigned to a recovery team, which accomplishes the recovery according to unit SOP. Equipment is recovered either to the battalion UMCP or to a designated MCP. Details of recovery operations are found in FM 20-22.

EVACUATION

Evacuation begins where recovery operations cease. Equipment that cannot be returned to the battle quickly is evacuated. Evacuation is from the UMCP to the maintenance company in the BSA by maintenance units within their own capability. Evacuation may also be by transportation units to the division MCP in the DSA or to a corps MCP. Evacuation is a coordinated effort between maintenance and transportation elements. Severely damaged equipment may be evacuated directly from the UMCP to any higher level of maintenance.

The G4 sets the overall division evacuation policy in coordination with the DISCOM commander. The DISCOM commander has overall evacuation control, which is exercised through the DMMC. The physical movement of equipment is done by the maintenance, supply, and transportation units of the DISCOM. This movement is done according to set procedures or in response to disposition instructions from the DMMC.

Items for evacuation are identified at the DS maintenance company level. These items consist of unserviceable equipment beyond the repair capability of the unit. Also considered are unserviceable assemblies from the repair process, and serviceable and unserviceable abandoned items found on the battlefield.

The DMMC provides overall management for the evacuation effort. It acts as the interface between the maintenance companies of the FSBs and other CSS elements to the rear of brigade boundary. Evacuation policies and procedures are set as a matter of SOP. Automatic disposition instructions for certain items prevent undue delay in moving equipment from the brigade to the DSA.

Maintenance units request disposition instructions from the DMMC through the support battalion support operations section for items not covered by automatic disposition lists. Transportation for equipment to be evacuated is provided by different sources. Maintenance unit assets and resupply vehicles returning to the rear may be used in the evacuation process. Also used are those vehicles provided in response to unit transportation support requests. For heavy equipment transportation, the maintenance units are dependent on the HETs of the transportation motor transport company.

Evacuation vehicles transport unserviceable assemblies and major end items according to disposition instructions from the DMMC. They also may backhaul serviceable assemblies and end items from rear repair activities to the forward maintenance or supply elements. HETs and other cargo vehicles bring major replacement items forward. Their operations are closely coordinated at the DMMC with the division WSM.

OPERATIONS

DISCOM maintenance elements operate throughout the division area. They typically perform their functions on site, at maintenance collection points, and at company base shops.

Maintenance support in the theater is depicted in Figure 8-7. Guidelines for time to repair at specific levels are provided for planning purposes only. The ultimate decision concerning times is a matter for command consideration.

MANEUVER BRIGADE SECTORS

On the basis of METT-T considerations, the FSB maintenance company commander, maintenance control officer, and the FSB support operations section form

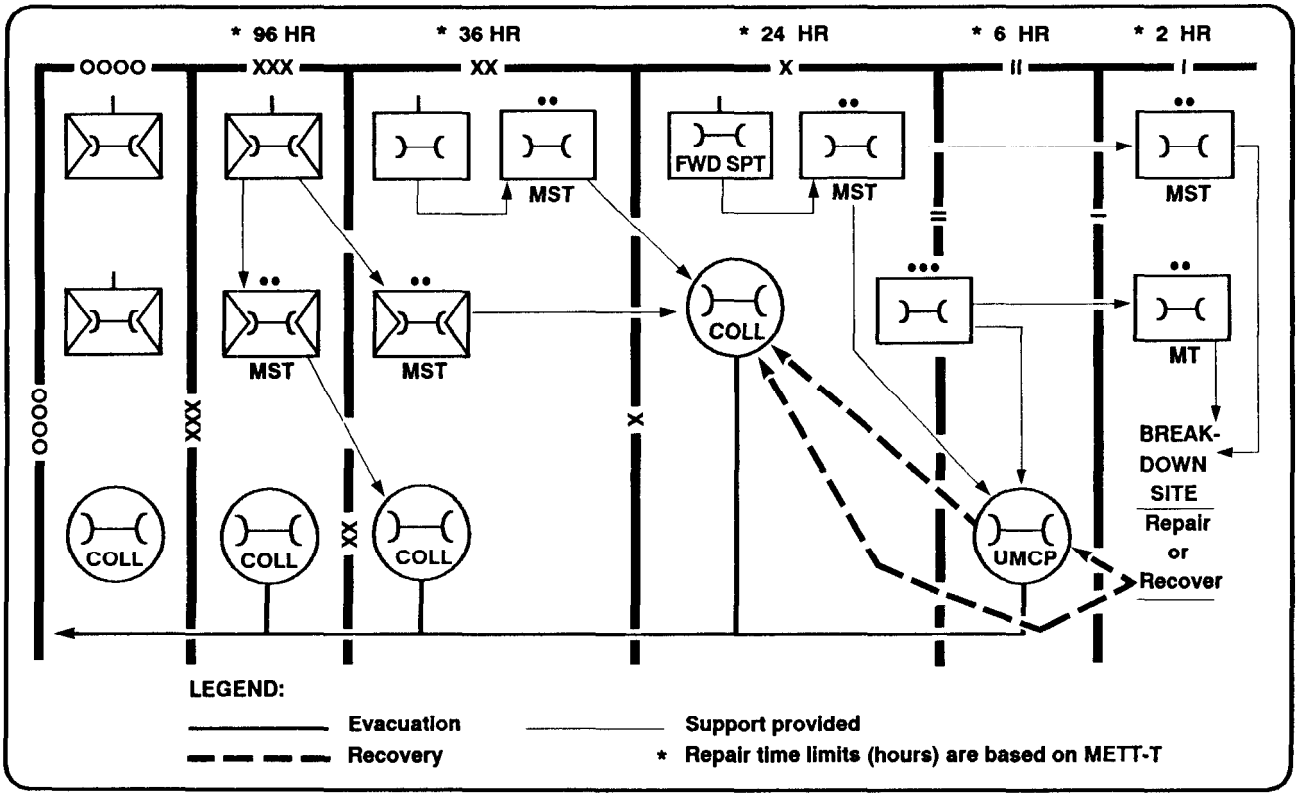

Figure 8-7. Maintenance support in the theater.

maintenance support teams to operate at battalion unit maintenance collection points. FM 63-20 has a detailed discussion of how these teams are formed. Though the maintenance company commander retains command and control of these teams, the maneuver battalion maintenance officers set the priorities for equipment repair.

Other FSB maintenance assets are positioned at MCPs or the base shop. When unit maintenance resources cannot handle the work load, MSTs or other teams of maintenance company assets maybe dispatched to perform on-site repairs. On the basis of maintenance timelines and the tactical situation, the team chief will determine whether to perform on-site repairs or to recover the equipment to an MCP.

The FSB can operate up to two MCPs to receive unserviceable equipment from supported units. MCP personnel perform large-scale battle damage assessment and may use controlled exchange and cannibalization to maximize operational systems.

All other FSB maintenance elements are located at the base shop. The base shop is responsible for receipt, inspection, control, repair, and coordination of evacuation of equipment. Elements of MSB maintenance companies may be used to augment the FSB's maintenance capability when the work load across the division and division's mission dictate.

DIVISION REAR

The light and heavy maintenance companies of the MSB operate the main division MCP at the base shop in the DSA. The MCP receives unserviceable equipment from supported units. The base shop performs the repairs which are the responsibilities of the light and heavy maintenance companies as outlined above. The missile maintenance company also establishes a base shop in the DSA. When required, these companies send MSTs out in the division rear to make repairs as close to the site of equipment failure as possible. Teams may also be sent to augment the FSB's maintenance capability.

The aircraft maintenance company locates in the division rear. It will operate from the airfield supporting the division or from a location adjacent to the airfield. It provides AVIM and associated supply support from its base location while also providing teams to support forward as required.

COSCOM maintenance elements may augment MSB repair capabilities when work loads and the tactical situation warrant.

COMMON REPAIR PARTS DISTRIBUTION SYSTEM

The job of Class IX supply in the division is shared by the direct support units and the DMMC. The direct support units receive, store, issue, and turn in the parts. Supply personnel in the materiel section of the DMMC manage and account for the Class IX inventory. They use demand history and command-directed actions to help them.

To prevent overstockage in the FSB maintenance companies, forward stockage of Class IX is restricted. Stockage parameters for forward DS units are listed in AR 710-2. Selection of this forward stockage is made in coordination with the MSB and FSB support operations officers and the FSB maintenance company commander. Determinations are based on the PLLs of the units to be supported and on the immediate mobility needs of the forward support maintenance units. The remaining stocks of the division Class IX ASL are maintained by the proper maintenance operating units. Examples of these operating units would be conventional and missile maintenance companies usually located in the DSA.

Customers in the DSA submit their requests directly to their supporting DS maintenance unit. The MSB maintenance company will usually pass requests directly to the DMMC.

Class IX items arriving in the division are received by the light maintenance company of the MSB. This company reports receipt of the item to the DMMC. Nonstocked items are forwarded directly to the user in the DSA. Items are forwarded to the FSB maintenance company for issue to the user located in the brigade area. All issues are reported to the DMMC for updating records. Turn-ins are handled in the same manner as receipts and are also reported to the DMMC. Missile Class IX items are managed through the MSB missile support company in the same manner. Figure 8-8 shows the flow of Class IX supplies.

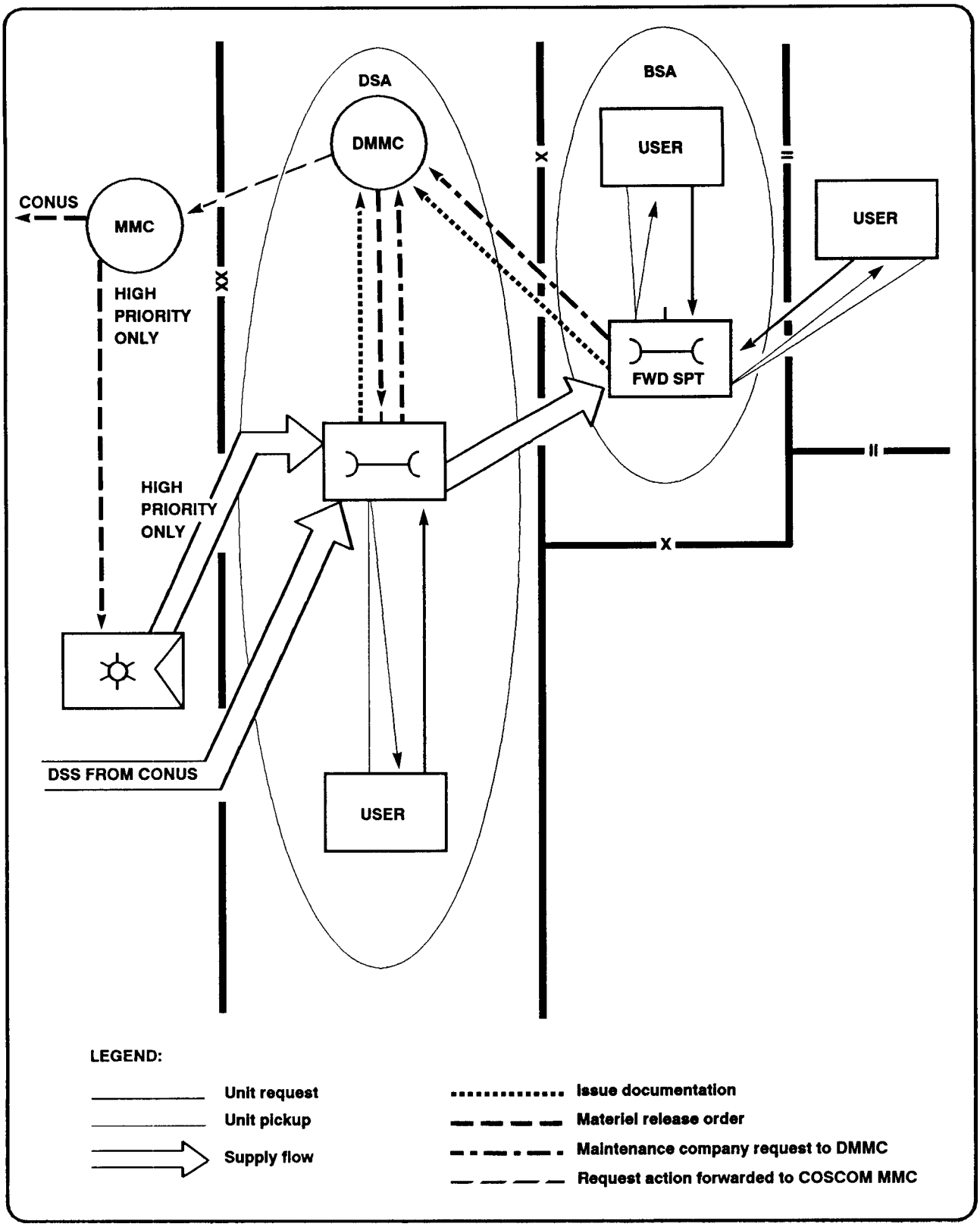

Figure 8-8. Class IX supply.

REPAIR PARTS DISTRIBUTION SYSTEM FOR THE AVIATION BRIGADE

CLASS IX GROUND SUPPLIES

Aviation brigade elements in a BSA submit their requests to the maintenance company in the forward support battalion. The aviation brigade elements located in the division rear submit requisitions to the MSB light maintenance company. The cavalry squadron submits requests to the closest FSB maintenance company for common Class IX supplies. Because of the mobility of aviation brigade elements, all requisitions not filled by the FSB are forwarded to the DMMC for fill from the division ASL. These requisitions must be earmarked according to SOP. This also applies to parts received from the COSCOM MMC for the cavalry squadron. The ground maintenance personnel in the attack battalion HHC supervise ground parts supply. The two responsible people are the maintenance technician and the NCO in the company headquarters section. When attack battalion elements are located in a maneuver brigade area, requests for Class IX common parts are processed through the supporting BSA the same as for the cavalry squadron.

CLASS IX (AIR) SUPPLIES

The AMCO provides repair parts supply for all division aircraft, avionics equipment, and aircraft armament systems. This company also maintains the division ASL for Class IXA.

Aviation brigade elements located at the division rear submit their requests to the AMCO. This company is also located in the division rear. Normally, all aviation PLLs and records for the attack battalions, AHC and CAC, are kept with the rear area AVUM section. When deployed in front of the division, the cavalry squadron may be unable to echelon trains elements. This would prevent the service platoon leader interface with the AMCO. When the field trains for the cavalry squadron are located in a forward BSA, the service platoon leader coordinates with the aviation brigade S4. This coordination is for the receiving of parts and AVIM support.

The AVUM platoon leader selects PLL items to be available forward at the combat trains or FARP for quick-fro repairs. Usage of these items must be reported to the PLL clerk so that the items can be replenished. Items required forward that are in the unit's PLL are reported to the AB S4 for transport forward. In emergencies, the AVUM platoon commander or service platoon leader uses his aircraft to secure parts from the rear. At least one aircraft from the CAC must be in direct support of the brigade S4 for emergency resupply of certain classes of supply.

CLASS VII/WEAPON SYSTEMS DISTRIBUTION

CLASS VII

Class VII stocks are maintained at corps level and higher. Division units submit their requests for Class VII items to the property book-Class VII section of the DMMC. If stocks are available within the division, the section directs lateral transfer of stocks between units to satisfy the requirement. If stocks are not available within the division, the DMMC requisitions them from the COSCOM MMC. Physical distribution of incoming stocks are handled through the same channels as Classes II, IV, and III (packaged). Figure 5-5 shows the request and delivery flow of Class VII items.

Class VII items are often designated in OPORDs as command controlled because of their cost and importance to combat. Command approval is required before these items can be issued. However, this does not necessarily mean commanders must approve every individual request. Division commanders may authorize the DMMC to release items on the basis of support priorities specified in the OPORD. The commander may place additional limitations on issue of items if he desires. This often includes setting quantities of critical items authorized to be issued to each unit in accordance with support priorities. If requests from a unit exceed its authorized quantity, the unit has to go through command channels to get its authorization changed. In any case, the DMMC and support operations branch must ensure procedures are established in advance.

Damaged or destroyed weapon systems must be reported. This is done because of the impact each weapon system has on the battle. The supply technician serves as the DMMC point of contact for the delivery of weapon systems in coordination with the WSM.

WEAPON SYSTEMS DISTRIBUTION

The MSB S&S company supply platoon (receipt, storage, and issue section) establishes a Class VII supply

point for major end items. This assembly area is normally located adjacent to a rail line of the MSR from corps. The MSB light maintenance company and the AG replacement detachment are normally located close enough to the assembly area. This is done so that coordination between all three elements remains quick and dependable. The corps notifies the DMMC that a particular system is scheduled for delivery. In accordance with priorities established by the division for issue, the DMMC alerts the MSB S&S company, the light maintenance company, and the replacement operation of the division AG that a weapon system is inbound. The DMMC also provides this information to the appropriate FSB for planning purposes. The WSM in the DMMC contacts the FSB to have crew members of the receiving unit report to the Class VII supply point. These crew members also pick up replacement crew members at the replacement detachment.

Incoming systems are off-loaded at the Class VII supply point. This is done by personnel from the supply platoon of the MSB S&S company. The MSB support operations section notifies —

- The DMMC for property book action. The DMMC property book-Class VII section immediately identifies the battalion to be assigned each new weapon system based on division priorities.
- The AG replacement detachment for coordination of the crews when necessary.
- The WSM that the incoming system has arrived.
- The MSB light maintenance company for coordination of maintenance support teams who conduct required system checks with new crews.
- The DISCOM movement control office to arrange HET transportation to the receiving battalion when required.

At the same time, the S&S company notifies the supply company of the FSBs what time the system will be delivered to the receiving battalion. The FSB supply company advises the receiving battalion of the expected delivery time.

The replacement detachment assembles the required crew members. The crew may be complete or partial, depending on personnel losses. The detachment coordinates destination of crews and delivery times. The crew —

- Completes storage of basic issue items.
- Checks out communications, using the MSB radio net.
- Test fires and zeros armament.

Requirements for unit or DS maintenance are accomplished by MSTs from the MSB light maintenance company or missile support company.

The S&S company of the MSB notifies the support operations section of the MSB who coordinated with the DISCOM MCO for the movement of systems from the DSA to the BSA. Systems and crews go to the FSB supply platoon or directly to the appropriate field trains area as coordinated through the FSB. Guides from the receiving battalion normally pick up the system and crews at the FSB supply company.

Chapter 9

Moving the Force

CONTENTS PAGE

MOTOR TRANSPORTATION ORGANIZATION 9-1
TRANSPORTATION OPERATIONS 9-1
MOVEMENT CONTROL 9-1
THROUGHPUT SUPPORT 9-3
AIRLIFT SUPPORT 9-4
AIRDROP SUPPORT 9-4

MOTOR TRANSPORTATION ORGANIZATION

The principal transportation asset of the DISCOM is the transportation motor transport company of the MSB. See Figure 9-1. The mission of this company is t o provide truck transportation for t he distribution of supplies and for the movement of heavy and out-sized vehicles and cargo. It also provides vehicles to help division elements needing supplemental transportation to include emergency unit distribution of class V.

Employment of division motor transport vehicles is centrally controlled. This is done by the DISCOM MCO who coordinates priorities with the division transportation officer. To the extent practicable every transportation dispatch is made to serve two purposes. For example, trucks that transport supplies and personnel forward to supported units also, on the return trip, bring back damaged and captured equipment, salvage, and prisoners of war.

The TMT company is usually located close to the MSB headquarters near main land lines of communication. The mission of the TMT company is to–

- Provide truck transportation for movement of supplies from DSA to BSA.
- Transport division reserve supplies for which the MSB is responsible.
- Furnish vehicles to assist division elements with requirements for supplemental transportation to include emergency unit distribution of Class V supplies.

TRANSPORTATION OPERATIONS

The DTO plans and establishes movement priorities based on the division commander's overall mission priorities. The division G3 assigns motor transportation mission priorities for tactical support. The DTO is the staffs communications link for transportation between the division and the corps. The DTO gives the DISCOM MCO broad policy guidance, basic plans and polities. He also provides staff supervision and assistance in transportation matters concerning all modes of transport. The MCO controls the employment of motor transportation assets and allocated air assets for CSS within the division. All transportation requirements within the division are forwarded to the MCO by all users. Transportation capabilities are then balanced against requirements and division-level priorities. When requirements exceed available division motor transport (and allocated air) capabilities, the DTO requests additional transport support through movement control channels. See Figure 9-2 for theater operations.

The heavy division has no organic heavy helicopters. However, aircraft sorties from division aviation assets may be allocated to the DISCOM. These sorties perform administrative and logistics missions. The division commander with his S3 establishes priorities for the use of utility aircraft to meet logistics needs. The division commander may dedicate or program aircraft to support airlift requirements from the division aviation brigade. Those he cannot support are forwarded to corps for additional aircraft.

MOVEMENT CONTROL

Effective movement management achieves maximum delivery capability with minimum use of transportation resources. Movement management in the division as performed by the DISCOM MCO and the DTO is discussed in this section.

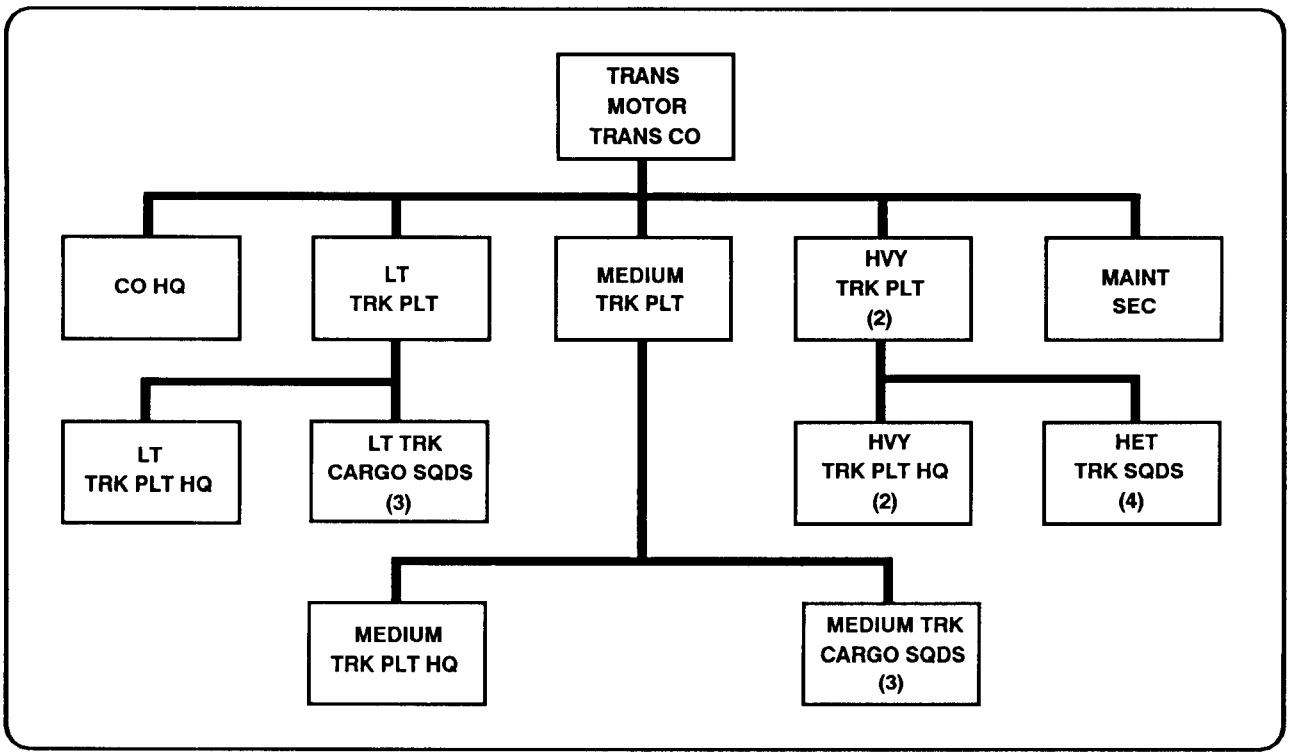

Figure 9-1. Transportation motor transport company, MSB.

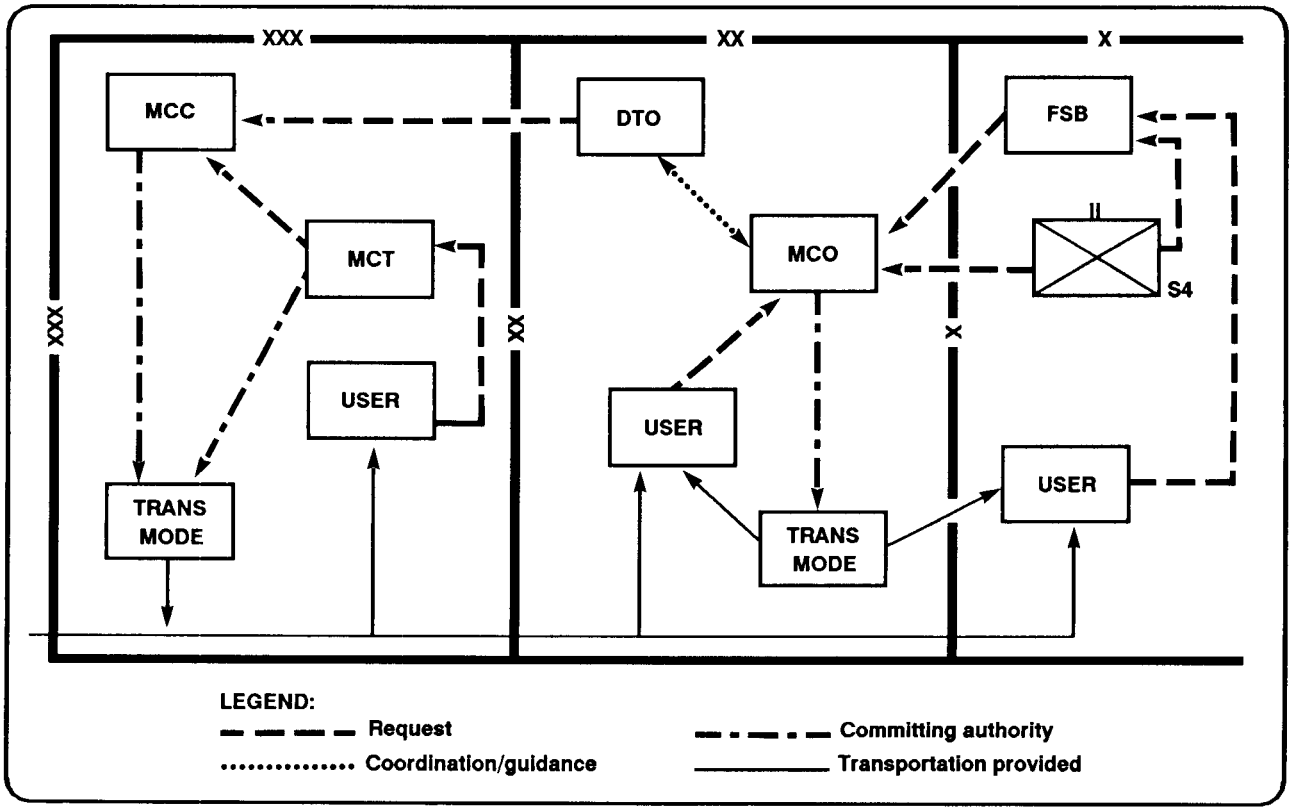

Figure 9-2. Transportation operations.

The DISCOM MCO is a member of the DISCOM commander's staff and is assigned to DISCOM headquarters. The MCO provides movement management support through control of employment of the division's motor transport assets for CSS. Movement management includes planning, coordinating, and controlling the allocation and use of available transportation resources to fulfill the commander's movement requirements. The commander charged with providing CSS exercises this control through the MCO.

There must be close and continuous coordination between the MCO and the DISCOM S2/S3, the DTO, the MCC, the support operations section of the FSB, and the operations officer of the PMO. The MCO is the link between the division transportation mode operators and the division users of transportation. The MCO's functions include–

- Advising the DISCOM commander and staff on transportation matters.
- Controlling commitment of the MSB TMT company task vehicles for CSS within the division. This requires close coordination with the MSB S2/S3, who receives commitments from the MCO and passes them to the motor transport company.
- Maintaining current data on the status of transportation assets committed to meet existing logistics requirements. The MCO and the MSB S2/S3 must agree on a simple procedure that provides data to the MCO for this purpose.
- Ensuring that established movement priorities are followed. When transportation requirements exceed capabilities, the MCO submits a request to the DTO for additional capability. The DTO requests additional capability from the corps MCC. However, if the corps cannot provide the required support, or if transport capability exceeds the receiving unit's off-load capability, the MCO may request from the DTO a reevaluation of priorities by the division G3 and G4. It may become necessary to adjust priorities until the transportation capacity shortfall is overcome.
- Coordinating arrival of personnel replacements and resupply movements with the FSB, the receiving organization, and other units, as appropriate. This ensures that the receiving activity can handle the movement and avoids congestion from transport equipment accumulating in the delivery area.
- Monitoring the status of containers and MILVANS in the division area. The MCO coordinates with receiving units to ensure that the capability exists to unstuff and move the containers and MILVANS.
- Providing mobility intelligence data to the DISCOM S2/S3 and to the DTO. These data are usually obtained through contact with the transport mode operators. These transport mode operators are the dispatchers, truck drivers, pilots, and users of surface and air transportation facilities. Mobility intelligence data describe limitations, if any, on the use of the transportation system.
- Providing contingency commitment of the MSB's vehicles for emergency evacuation or relocation of ATPs.

THROUGHPUT SUPPORT

Mission and mobility requirements place constraints on the quantity and variety of supplies that the supply and maintenance companies can have on hand at any given time. The companies and their supporting activities coordinate their activities in order to cut down on the response time between initial request and subsequent issue to the requesting unit. Throughput is a method employed to get supplies forward as quickly as possible.

Throughput distribution bypasses one or more echelons in the supply system to minimize handling and speed delivery forward. Supplies are often throughput to the BSA from the corps and, in the case of barrier materials and some Class VII major end items, may be throughput directly to the user. Also, when most of a specific load is designated for a specific unit, transported use the throughput system and deliver directly to the requesting unit whenever possible. In most cases, throughput operations are handled by corps transportation assets and coordinated through the MCO.

AIRLIFT SUPPORT

Airlift support for the division is provided by Army and Air Force assets. There are two types of requests for airlift support. Preplanned requests are those that are known requirements geared to a particular mission. Immediate requests are those initiated by resupply requirements that cannot be determined in advance.

PREPLANNED REQUESTS

Within the theater of operations, a requirement may exist to provide rapid dependable airlift of personnel, cargo, mail, and courier material on a regular basis. These airlift missions are based on known or projected requirements and are programmed in advance. The amount of time required to coordinate preplanned airlift support is established by the COMALF. This time factor will be based on the operational requirements and the capability of available airlift resources. Preplanned airlift support is available to components of the joint force in accordance with apportionment provided by the JFC. Tactical operations and special missions use preplanned airlift support when sufficient time is available to schedule necessary assets.

IMMEDIATE REQUESTS

Immediate airlift missions result from unanticipated, urgent, or priority requirements. To meet these requirements, the ALCC may provide aircraft on a quick-reaction basis at designated on-load locations. Also, immediate requests may be filled by diverting or canceling preplanned missions or by generating a standby sortie. An airlift mission of an emergency nature may use a preplanned airlift sortie. However, this type of mission usually becomes an immediate mission, using the highest priority. This priority is established by the theater commander. Airlift missions of an emergency nature are those critical to the accomplishment of the tactical mission or the survival of a unit. They should be attempted at the required time if at all possible.

When requesting airlift for CSS air movements, the G3/S3 develops the requirements for airlift and coordinates its use. The actual request is processed by the G4/S4 through logistics channels.

AIRDROP SUPPORT

Airdrop is a method of delivering supplies and equipment to ground forces. Normally, Air Force cargo aircraft are used for airdrop resupply missions; however, supplies may be dropped from Army aircraft. The Army is responsible for the supplies and equipment to be airdropped and the ground transportation to move them. Providing parachutes, rigging the supplies to be dropped, and providing the ground personnel to support the operation are also Army responsibilities. When Air Force aircraft are used in an airdrop resupply mission, airdrop resupply becomes a joint operation involving Army and Air Force units. Airlift support is usually controlled centrally by the Air Force component commander through the airlift commander and his ALCC. Requirements for airlift support are consolidated at the senior transportation agency of each service component. For example, the TAMCA would consolidate the airlift requests in a multicorps operation. The corps MCC would be responsible for an independent corps operation. The DTO would be responsible in an independent division operation. The requirements are forwarded to the joint force designated agent for validation and assignment of priority. The agent forwards the requirements to the ALCC for execution on call. All units from company to division should be familiar with airdrop request channels. The joint transportation board makes recommendations to the joint forces commander if a conflict in priorities arises.

As with any other resupply requirement, a request for airdrop is sent through normal logistics channels. Using units request supplies from their battalion S4 who goes to the FSB. If the FSB cannot fill the request, it sends the request to the DMMC. The DMMC sends the request to the COSCOM MMC. The corps MMC coordinates with the corps MCC and, jointly, they direct the actions of the supply and transportation elements. The MCA forwards the request to the JFC agent for validation and assignment of priority. Then the agent forwards the request to the ALCC for execution. If the supplies and equipment requested are not on hand in the airdrop company, the MMC directs the appropriate supply activities to prepare the items for delivery to the airdrop units. The company also coordinates with the MCC to make the shipment. The airdrop unit prepares the supplies for airdrop. It also coordinates with the MCC to make sure that the supplies are delivered to the air terminal.

The unit requesting an aerial resupply mission is responsible for selecting, preparing, and marking

the drop or landing area. It is also responsible for providing qualified ground movement guides and unloading teams to expedite aircraft turnaround. The supported unit recommends the approach and departure routes for the aircraft. When the enemy situation or terrain warrants it, the unit secures the delivery or landing area. Units receiving airdrop supplies recover and return to supporting units all nonexpendable materials used to unitize or rig the supplies for delivery.

Appendix A

Rear Operations

CONTENTS PAGE

GENERAL A-1
MOVEMENTS A-2
TERRAIN MANAGEMENT A-4
SECURITY OPERATIONS A-5
AREA DAMAGE CONTROL A-8

GENERAL

Rear operations are actions taken by all units to secure and sustain the force. These actions are taken singly or in a concerted effort. They include those actions necessary to neutralize or defeat enemy operations in the rear area. They also ensure freedom of action in deep and close operations and include area damage control.

The division commander is responsible for rear operations within his boundaries. Within the maneuver brigade area, the brigade commander is responsible for rear operations, as discussed in FM 71-3. Threat activity may exceed the capability of a forward brigade's assets. When this happens, the division commander may assume responsibility for defeating a Level III threat in the brigade rear area by restructuring the brigade area.

REAR OPERATIONS OBJECTIVES

The objectives of rear operations are to –

- Secure the rear areas and facilities.
- Prevent or minimize enemy interference with command, control, and communications.
- Prevent or minimize disruption of combat support and CSS forward.
- Provide unimpeded movement of friendly units throughout the rear area.
- Provide continuous, unimpeded support to deep, close, and rear operations.
- Find, fix, and destroy enemy incursions in the rear area.
- Provide area damage control before, during, and after an attack or incident.

REAR OPERATIONS CONSIDERATIONS

The key considerations to rear operations are sound planning, early warning, continuous OPSEC, and the rapid deployment of sufficient forces and resources to counter the threat. Rear operations is a command responsibility. The division commander ensures battle planning includes consideration for deep, close, and rear operations. Rear operations are a vital part of the division's overall operations. They are part of the mission analysis, the threat assessment, and IPB. They are also part of resource allocation, and the base assessment process.

The principle of economy of force means DISCOM units must defend themselves against attempts to disrupt their operations. They must be able to minimize destruction and to reinforce their units. DISCOM units must also be able to gain time until response forces arrive. As discussed below, units form base defense perimeters to defend against the threat. If enemy forces exceed base and base cluster defense capabilities, response forces are used. These forces will provide the initial force to close with and to destroy the enemy. If an enemy incursion exceeds the capability of response forces, tactical combat forces must be committed to neutralize the threat.

Responsiveness is a key to defeating enemy incursions in the rear area. Responsiveness requires the immediate reaction and rapid deployment of sufficient combat power and area damage control resources. These two forces destroy the enemy and ensure minimal damage to the area. Responsiveness is achieved through–

- Effective command relationships and supervision.
- Reliable communications.
- Accurate intelligence.
- Centralized planning and decentralized execution.
- Organic mobility of response force.
- Training and rehearsals.

- Prior assessment of the capabilities of bases and facilities to withstand enemy attack. This assessment is based on a unit's degree of exposure and that unit's importance to the division's ability to sustain operations. This mission-essential vulnerability analysis assists the DISCOM commander. With this analysis, the commander is able to allocate resources to protect personnel, supplies, and facilities in consonance with their importance to the mission.

RESPONSIBILITIES AND C2

Four activities must be conducted as part of rear operations: sustainment, movement, terrain management, and security. The mission of the rear CP is to integrate these functions to support the DISCOM commander's concept and facilitate current and future operations. Area damage control is a responsibility of commanders at all levels. It crosses the four major functional areas. For clarity, ADC will be addressed separately.

The rear CP consists of three cells: headquarters, operations, and CSS. The ADC-S in the headquarters cell is the rear operations commander in the division. The operations cell plans and controls terrain management, security, and ADC in the division rear. It also synchronizes all rear operations activities. The CSS cell is responsible for sustainment planning. In this regard, it works closely with the DISCOM commander and staff. It is the DISCOM commander and staff who have primary responsibility for logistics operations.

As discussed in Chapter 2, the DISCOM commander commands and controls the MSB, the FSBs, and the aircraft maintenance company. In addition, corps logistics units located in the DSA are controlled tactically by the DISCOM commander. Typically, the DISCOM commander is designated by the ADC-S as a base cluster commander. His base cluster will normally include units located in the DSA. Corps logistics units, such as ammunition supply points, may be located at isolated locations within the division rear. They either operate as separate bases or are assigned to a base cluster by the ADC-S. The FSB commander is normally the base cluster commander for units in the BSA.

MOVEMENTS

The sustainment efforts of the division are made possible through movement. Required supplies and personnel replacements must move from the sustainment base at corps and EAC into the division rear. From the division rear, these assets need to move forward to support the main battle. Casualties and damaged equipment must be evacuated from the forward area for prompt treatment or repair and returned. Movements take place among the forward brigade areas, the division rear, and the corps rear area. Movement also takes place laterally within the division.

RESPONSIBILITIES AND COORDINATION

Tactical movements are the responsibility of the G3. The G3 is assisted in this task primarily by the DTO and the PMO. He is also assisted by such special staff officers as the division AFSCOORD, engineer, air defense, and signal officers. The G3 representatives in the operations cell of the rear CP assist the division G3 primarily by resolving conflicts between tactical and nontactical movements, normally giving priority to tactical convoys. They may also assist the G3 in coordinating corps-level tactical movements throughout the division.

The planning coordinating and execution of logistics movements within the division rear is the responsibility of the CSS cell in coordination with the DISCOM MCO and the military airlift command air liaison officer. The MCO in conjunction with the DTO coordinates the movement of supplies and materiel from the DSA to the BSAs and return. He also coordinates CSS movements between the corps rear and the DSA, or, in the case of throughput, directly to the BSAs. The operations cell assists in obtaining combat support resources for CSS convoys moving within the division rear. These resources would include the engineer, NBC, smoke and flame, reconnaissance and chemical decontamination support, MP support, and fire support.

As discussed in Chapter 9, the DTO is responsible for developing and implementing the division traffic control plan for both tactical and nontactical movements. He is assisted by the DISCOM MCO and rear CP operations cell. The DTO reserves routes for tactical movements, identifies primary and alternate main supply routes, and institutes traffic control measures. These actions are all performed through the guidance received from the G3. Traffic control measures may include restricting certain types of movements to specified routes during specified times. Traffic control may also require designating certain routes as one-way or two-way traffic lanes.

Traffic control also requires coordinating the establishment of permanent or temporary traffic control points. If centralized control is to be implemented, the DTO may require both units and the MCO to request movement clearances. He may also institute a movement credit system. This system would control movements exceeding a certain number of vehicles emanating from a base or base cluster. It would also control those vehicles entering the division rear from the brigade or corps sectors.

To control movements in the division rear, the rear CP may designate a movements control FM net, require units to report convoy start and end times by VHF, or rely on information from MP traffic control points or patrols. The rear CP must be able to stop or shift traffic between routes. It must be able to gather information on enemy and route conditions. It must also be able to respond to requests for help from convoys encountering enemy activity.

SECURITY

Logistics traffic is a high priority interdiction target for threat aircraft, artillery, and unconventional warfare elements. In the offense, bypassed enemy forces will attempt to get supplies by force. Single vehicles, especially ones moving fuel and ammunition, will be ambushed by unconventional forces.

After assessing threat capabilities and intentions, the rear operations commander may decide to assign escorts to critical convoys such as those moving fuel and ammunition. Escort possibilities include ground escorts of MPs, combat engineers, or tactical forces. Also considered are aerial escorts or ADA systems such as Vulcans and Stingers. When resources are scarce, dedicated escorts may not be practical or possible. In such cases, response forces, air defense, or fire support assets may be positioned along the MSR to provide general support.

DSA MOVEMENT

The first step in DSA movement is to determine the new location. The next consideration centers on what units will occupy the area and how these units will move in echelons. An advance party of representatives from the moving units will be sent to the new location. The advance party is deployed early to become familiar with the new site and to conduct security and NBC sweeps of the area. Once the area is secure, the advance party establishes initial communications among units. The advance party performs the following tasks:

- Establish LPs, OPs, and dismount points.
- Conduct security sweeps of new site to ensure area is free of enemy forces.
- Conduct NBC surveys to ensure area is free of contamination.
- Establish communications with the main body of the unit and notify command of results of sweeps.
- Facilitate arrival of quartering party.

The quartering party consists of representatives of each unit and subelement. It prepares the new DSA for arrival of the main body. It must have enough assets to perform the following tasks:

- Increase security by manning key points along the perimeter.
- Establish communications with parent and higher headquarters.
- Select locations for unit vehicles, work sites, and tentage.
- Establish land-lime communications among the BCOC, unit CPs, dismount points, LP/OPs, and other critical sites.
- Select individual and crew-served weapon fighting positions.
- Position personnel to guide arriving units from the RP to preselected locations.
- Position chemical alarms.

The main body begins the move in accordance with the OPORD issued by the rear CP. The serials should be planned to move by echelon. An entire DISCOM element's mission capability should never be included in a single serial. However, individual elements should not be too fragmented due to austerity of communications assets. The first serial or serials should include elements of critical support points. These include MSB assets for Class III, V, and IX, critical maintenance; and medical treatment.

When the main body closes, ideally during hours of darkness, the quartering party meets and guides it to the positions. Work then follows the priorities set by the commander in the movement and occupation order. Establishment of hasty defenses normally has priority over the logistics mission. The following is a suggested sequence of tasks for the main body:

- Finalize communications among units.
- Erect work areas.
- Camouflage vehicles and installations.

- Position crew-served weapons.
- Prepare primary fighting positions.
- Clear fields of fire and prepare range cards.
- Emplace wire, mines, and other obstacles and cover them by fire.
- Site FPFs and select TRPs.
- Select composition of and position for reaction force.
- Select and prepare alternate and supplementary positions.
- Finalize base defense plan. The plan should depict base layout, sectors, and the fields of fire of crew-served weapons. It should also contain obstacle and fire support plans.
- Implement reconnaissance and surveillance plan.
- Emplace sensors and early-warning devices.
- Prepare protective positions adjacent to work areas.
- Prepare and rehearse reaction force.
- Submit base defense, obstacle, and proposed fire support plans to BCOC. For independent bases, the same information is submitted to the division rear CP.
- Coordinate with adjacent bases.
- Plan deceptive measures.

More details on movement of MSB elements is in FM 63-21. BSA movement is addressed in Appendix A of FM 63-20.

TERRAIN MANAGEMENT

DISCOM units have unique terrain requirements. They must be positioned adjacent to established LOC in order to facilitate their mission accomplishment. Air strips, primary and secondary road nets, rail heads, and often, established water sources are key considerations in the positioning of DISCOM units. Their positioning must simplify the receipt of supplies and materiel from higher echelons and their movement forward to the main battle area. Defined routes for the forward movement of supplies also allow for the evacuation, repair, and return of damaged equipment to the support areas. Terrain also affects mission effectiveness. Support operations located in built-up areas with adequate power, hardstands, and civilian resources operate more efficiently than those located in a field site. The DISCOM S2/S3 is aware of the unique terrain requirements of the DISCOM. The S2/S3 works with the CSS planners and terrain managers in the rear CP to ensure that the terrain needs of DISCOM and corps CSS units are known. DISCOM mission considerations must be integrated with security and movements considerations when making terrain decisions.

Locations of DISCOM elements vary depending on METT-T. Specific positioning considerations for MSB and FSB elements are discussed in FM 63-21 and FM 63-20 respectively. General guidelines include the following.

- Positioning the DISCOM CP near the center of the DSA for C2 and security reasons.
- Balancing the advantages of dispersion with the disadvantage of constrained C3. In general the DSA can be expected to occupy an area approximately 7 to 10 kilometers in diameter. The BSA can be expected to occupy an area approximately 4 to 7 kilometers in diameter.
- Making supply points accessible to both customers and transportation assets replenishing the supply points.
- Keeping Class III points away from other supplies to prevent contamination. They should also be located at least 100 feet from water sources.
- Locating ATPs at least 180 meters from other supplies and 620 meters from the nearest inhabited tent.
- Positioning GRREG and salvage points near the MSR, possibly in the vicinity of the ATP. This maximizes the backhaul missions of vehicles used for ammunition supply.
- Locating the Class I points near the water point whenever water sources allow.
- Locating medical facilities away from likely targeted areas. Examples of targeted areas would be ATPs, Class III points, bridges, or road junctions. However, medical facilities should be near evacuation routes and open areas that can be used for landing air ambulances.
- Locating maintenance sites so they are accessible to customers and evacuation vehicles.
- Positioning units with heaviest firepower along the most threatening avenues of approach.

SECURITY OPERATIONS

Security operations enable the DISCOM to perform its foremost rear operations function–sustainment. DISCOM commanders are responsible for the security of their units. They must ensure that their units have the knowledge and training required to be proficient in basic tactical skills.

ORGANIZATION FOR SECURITY

To enhance sustainment operations, DISCOM elements are often grouped together. Elements may be grouped into bases and base clusters for mutual support. The ROC is ultimately responsible for the composition of bases and base clusters in the division rear. Factors discussed under terrain management apply here. In addition, the ROC must ensure units selected for collocation complement each other. A mix of weapon systems, planning and supervisory personnel, and varied communications assets are required to form a viable base.

The DISCOM S2/S3 and MSB S2/S3 sections coordinate with the rear CP on grouping of DISCOM units in the division rear. In the maneuver brigade area, the FSB commander is responsible for BSA security. Through his S2/S3, he coordinates with the brigade rear CP for planning security operations.

Certain bases or base clusters are designated as critical by the CSS and operations cells of the rear CP. This is done in coordination with the DISCOM staff. These critical bases may contain a majority of a class of supply or service. An example of a critical base might be a nuclear or chemical ammunition storage site. Other examples might be ammunition or fuel storage sites. All command and control headquarters are considered critical as are critical communications nodes. In addition to its criticality, each base is assessed for its vulnerability. Vulnerability is based on the base's location, composition, and relative target value. Since forces cannot be strong everywhere, resources must be used to protect the most critical and vulnerable assets first.

INTELLIGENCE

Though the division rear CP coordinates rear operations in the division, the DISCOM must be intimately involved in the IPB process. As discussed in FM 63-20, the FSB, as the rear operations center in the BSA, employs IPB techniques covered in FM 34-130, Appendix G. The DISCOM headquarters must also be involved in IPB. This is necessary because of the value of information in sustainment planning and because commanders are responsible for the security of their units.

Terrain

The concept of OCOKA is used to analyze terrain. OCOKA refers to observation and fields of fire, concealment and cover, obstacles, key terrain, and avenues of approach. The DISCOM commander relies heavily on the rear CP for terrain analysis. The division is supported by a direct support terrain team which provides information to the G2 for IPB.

Line of sight is required in the DSA and BSA for radios, ground and air observers' vision, air defense target acquisition, and fields of fire for DISCOM direct fire weapons.

Concealment is protection from air and ground observation. Cover is protection from effects of fire. The DISCOM must determine what possibilities the terrain offers to both friendly and enemy forces. This analysis is vital to DISCOM units in view of the limited weapons available and numerous personnel and items of equipment in the area. In built-up areas, DISCOM elements are likely to occupy buildings to maximize cover and concealment. Buildings significantly reduce heat signature. However, planners must consider the road net available for sustainment and security operations. Large area smoke hazes can provide concealment or contribute to deception operations. These measures are effective for periods of increased vulnerability. Periods of vulnerability would involve air attacks or unit moves.

Obstacles are natural and man-made features that stop, impede, or divert movement. DISCOM planners must be familiar with all existing obstacles and the effects of removing, overcoming, or bypassing them. Weather effects on trafficability also act as obstacles.

Any feature that provides a tactical advantage is key terrain. The tactical situation determines if a particular feature is key or not. However, key terrain features may include bridges, fording sites, high ground, choke points, and road junctures.

Avenues of approach are ground and air routes by which a force may reach an obstacle or key feature. Considerations for avenues of approach in the rear are their capabilities to support movement to allow rapid enemy movement into the rear.

Weather

Weather affects mobility and the functioning of virtually all items of equipment, as well as the performance of personnel. Terrain and weather are considered concurrently. Again, DISCOM planners depend on the rear CP to pass weather analysis information from the division weather team. There are various aspects of weather that affect CSS planning. These aspects are temperature and humidity, precipitation, wind, clouds and visibility.

Threat Evaluation and Integration

Threat evaluation is a detailed study of the enemy forces. It considers threat organization, tactical doctrine, equipment, and support systems. The DISCOM passes any information it has on the threat to the rear CP to assist in its evaluation. Truckers from the TMT company and customers coming into support points are valuable sources of information.

Once the threat evaluation is complete, this information is integrated with weather and terrain factors. This determines how the threat is likely to operate in our rear area. Relevant information developed by the rear CP is passed to the DISCOM. Base clusters must ensure that all base commanders understand the different threat levels and the associated actions. The ROC must also be aware that DISCOM units are neither staffed nor equipped to continue support operations at normal levels while responding to increases in threat activity. Support will be degraded. How much support is degraded is dependent upon responses to threat activity.

Level I threats are those which can be defeated by base or base cluster self-defense measures. They normally involve the activities of agents, saboteurs, and terrorists.

Level II threats are those beyond base or base cluster self-defense capabilities. This threat can, however, be defeated by response forces, typically MPs with supporting fires. This threat normally involves sabotage, raid, ambush, and reconnaissance operations. These operations are normally conducted by special purpose or unconventional forces and tactical reconnaissance units.

A tactical combat force is required to defeat a *Level III* threat. Level III threats normally involve –

- Heliborne operations.
- Airborne operations.
- Penetration by enemy forces from the main battle area.
- Ground force deliberate operations (for example, operational maneuver groups with linkup of smaller airborne and assault units).
- Infiltration operations.

BASES

A base is a unit or multiunit position with a definite perimeter. For DISCOM units, the DISCOM commander determines the position of the base in conjunction with the division rear CP. Frequently, a DISCOM company constitutes a base. Normally, the base commander is the senior unit commander when more than one unit is in the base. Selection of the base commander should take into consideration not only rank, but also branch and experience. The medical company commander may not command a base or cluster with nonmedical units.

The base commander is responsible for planning the base defense plan and coordinating with its appropriate base cluster operations center. The base commander establishes a base defense operations center to operate 24 hours a day. The BDOC is normally formed from the staff of the base commander. If the units occupying the base are less than battalion-sized, the base commander draws personnel and equipment from his own and tenant units to form a functional BDOC. The base commander trains all personnel in basic defense techniques to establish a viable perimeter. The commander develops a reaction force. This force is designed for internal security and reinforcement of the base. Each base must be capable of defending itself against a Level I threat and delaying a Level II threat until the base cluster reaction force arrives. Additional response forces external to the base and base cluster may be requested to repel a Level II threat. The designated echelon commander determines Level II response forces based on the operational situation, METT-T, and IPB. If a base is faced with a Level III threat, it must take action to prevent critical supplies and equipment from falling into enemy hands. It must be prepared to defend itself as long as possible and avoid capture.

Whenever possible, the base should be situated and configured to take advantage of natural and man-made terrain features. The area to be defended may vary from high ground with good observation and fields of fire to a highly congested area with buildings or vegetation obscuring observation and limiting fields of fire. Both the support mission and security considerations are invoked in the positioning decision. In addition to terrain factors discussed

above, considerations include the following:

- Dispersion.
- Cover and concealment.
- Internal accessibility,
- Proximity to supported units.
- Security and defense capabilities.
- Communications.

The final selection of a site includes a thorough ground reconnaissance of the site chosen by map reconnaissance. Tentative locations of base elements are determined and marked. Sketches of the area are prepared. The BDOC develops the traffic circulation plan. He positions OPs and LPs and establishes motor parks. He is also responsible for completing the base defense plan. Sketches also show the locations and directions of fire for any crew-served weapons. Weapon systems in the DSA or BSA for repair should be integrated into the defense plan whenever possible.

BASE CLUSTERS

Base clusters contain several bases grouped together to enhance security and mission accomplishment. A base cluster normally does not have a defined perimeter or established access points. Base clusters rely on mutual support among bases for protection. Mutual support is achieved through interlocking fires, integrated patrol and surveillance plans, and use of reaction forces. A base cluster reaction force also aids in mutual support. The base cluster commander must designate the personnel in the reaction force and ensure they have sufficient weapons, mobility, and communications. They must be trained to react quickly and appropriately.

The DISCOM commander is normally the base cluster commander for units in the DSA. The AMCO normally falls in with the defense plan of the aviation brigade. (FSB units in the BSA are part of the base cluster commanded by the FSB commander, as discussed in FM 63-20.) The base cluster commander establishes a base cluster operations center with assets primarily from the S2/S3 section. The BCOC provides the command and control to plan, coordinate, and supervise base cluster operations. It interfaces with the rear CP on terrain management, movements requirements, and security operations. The BCOC positions units assigned to the cluster into bases and designates the base commanders. The rear CP assigns division and nondivision units in the division rear to base clusters or independent bases. The base cluster commander is responsible for integrating base defense plans into abase cluster defense plan.

DEFENSE OPERATIONS

An effective base defense system must accomplish the following four tasks:

- *Security of the base.* The base and base cluster commanders must establish the necessary defensive measures to ensure the security of their units. Each commander must apply METT-T analysis to determine requirements.
- *Detection.* Detection is the early warning of enemy infiltration attempts. Detection devices include day and night observation devices as well as communications, intelligence, radar, and sensor equipment. Chemical and radiological monitoring must also be used. Warning systems and procedures must be established and understood by all personnel. If an attack is unlikely, few people are involved in defensive operations. However, personnel will always man LPs, OPS, and access points. If a threat is probable, defensive requirements will disrupt support operations. Alarms should be used to notify all personnel of alert postures. Warning devices include sirens, pyrotechnic and horns. The MPs are the base and base cluster commander's link for detection, early warning, and deployment against enemy attacks in the rear. Information gathered by MP elements dispersed throughout the rear area helps apprise commanders of enemy activity near bases. When the ROC determines the need, MPs respond to bases under attack. (See FM 19-1.)
- *Delay.* The defense system must be able to hinder the threat's progress to permit defense forces to react. Obstacles covered by direct or indirect fires slow or canalize movement. The ROC can, with G3 approval, authorize mine emplacement in the division rear. However, he must ensure a proposed minefield is coordinated with adjacent, higher, and subordinate units. He must also ensure limitations to friendly maneuver units are minimized and all requirements for reporting, marking, and recording are met.
- *Destruction.* DISCOM units should place machine guns and lightweight antiarmor weapons to cover obstacles and avenues of approaches. Grenade launchers mounted on vehicles are effective fire suppression systems that can be

quickly dispatched to threatened areas. Weapons in the DSA and BSA for repair should be integrated into the defense plan if the firing systems are operational. If the threat exceeds the base's capability, the base may not be able to prevent breach of the perimeter. Evacuation of critical units should be preplanned and rehearsed for emergencies.

AREA DAMAGE CONTROL

The division commander provides guidance to planners on requirements to support the AirLand Battle, including area damage control. The ROC is responsible for ADC plans to provide necessary support. Planners in the G4 shop and DISCOM ensure logistics and medical support is available to support the division. The DISCOM S2/S3 coordinates directly with the rear CP to ensure that mutual support of the commander's base assessment is within the ADC capabilities reported to the rear CP in the base cluster defense plans. When ADC assets are available, the rear CP must provide each base with external support necessary to overcome an attack and return to its primary mission.

Effective planning, setting of specific responsibilities, and use of all available assets to conduct ADC are necessary to restore operations and provide continuous support. ADC assets are limited. In emergencies, assets likely have to be diverted from other missions. In most cases, bases have to use local assets to deal with the situation.

DISCOM base and base cluster commanders identify assets available for ADC. Assets include medical evacuation and repair, critical supply, and EOD assets. Commanders identify critical support points, to include points that are the sole local sources of supplies. They also assess the base and base cluster capabilities to conduct ADC operations. ADC plans must be included in BDOC and BCOC defense plans.

The rear CP, with DISCOM assistance, reviews base cluster defense plans to ensure ADC plans are adequate and compatible. It also identifies host-nation support available and performs the required coordination to implement plans. The DISCOM S2/S3 helps the rear CP identify emergency food, clothing, water, and fuel sources and available distribution assets.

Appendix B

NBC Considerations

CONTENTS PAGE

THREAT B-1
NUCLEAR, BIOLOGICAL, AND CHEMICAL DEFENSE B-1
NBC PLANNING B-2
COUNTERING NUCLEAR WEAPONS OR CHEMICAL/BIOLOGICAL AGENTS B-2

THREAT

Threat forces have engaged in sustained efforts to build up their combat capability. These efforts have focused on their ability to employ NBC weapons. They have also focused on their ability to fight and survive in an NBC environment. Threat doctrine clearly envisions the use of chemical weapons. The use of chemical weapons may be done in conjunction with either nuclear or conventional weapons. Threat forces are large, well equipped, and well trained in NBC operations and defense. In addition to specialized NBC troops, all other threat combat and combat support forces receive extensive NBC training. Therefore, it is imperative that US forces plan to fight in an NBC environment.

Nuclear weapons have a greater blast effect than conventional weapons. The thermal (heat) and nuclear radiation from them pose significant hazards. CSS supplies and equipment can be crushed, dragged, or tumbled by blast effect. Personnel can receive internal and external injuries from the blast, nuclear radiation, and thermal radiation. Thermal radiation can cause fires in supply points. Unit supply distribution maybe hampered by trees that have blown down. In addition, dirt and dust raised by the blast can obscure both vision and sighting devices. The EMP from a nuclear detonation can damage ADP and communications equipment and make them inoperative. Night nuclear attacks can create a serious dazzle for personnel in the vicinity of the detonation.

Biological and chemical weapons are engaged to delay, degrade, incapacitate, or kill personnel. In a chemical environment, personnel must wear protective clothing, gloves, masks with hoods, and overboots to protect themselves from contamination. Based on the immediate threat and mission requirements, CSS commanders must determine what MOPP level their units will assume.

Threat forces may also employ nonnuclear weapons that replicate the destructive effects of small tactical nuclear weapons. Normally, the S2 will identify that the enemy has this type of munition available for employment. The defensive measures used against this type of munition are the same as those used to defend against a nuclear attack.

This type of attack produces intense heat and overpressure. It does not produce radioactive fallout. Follow-up NBC-1 reports must be sent to the DISCOM and supported brigade S3s. These reports prevent any misunderstanding that US forces have been subjected to nuclear attack. These reports are sent with a FLASH precedence and include a text message identifying that no radiation is associated with the attack.

The most effective protective measures against most biological weapon systems are good field sanitation, good personal hygiene and up-to-date immunizations. The protective mask must also be readily available and properly fitted. Adequate protection against biological toxins such as “yellow rain” require the appropriate MOPP level of protection.

NUCLEAR, BIOLOGICAL, AND CHEMICAL DEFENSE

Contamination avoidance, protection (individual and collective), and decontamination are the basic measures for defense against NBC hazards. Units must train in these defensive measures in order to minimize the effects of NBC attacks.

In a chemical environment, DISCOM personnel may have to work in full protective equipment. Working in MOPP-4 for extended periods reduces productivity. CSS units take longer to do their jobs. Contaminated equipment hampers salvage, recovery, reclassification,

and maintenance operations. Commanders have to decide either to perform time-consuming decontamination operations or increase personnel risk to accomplish the mission. Maintenance may have to be performed on contaminated equipment. All medical patients have to be decontaminated before entering medical treatment facilities.

Units should cover critical supplies and equipment to protect them from chemical/biological contamination and from nuclear fallout. Also, personnel should avoid chemical/biological contamination or radiation whenever possible. These procedures keep the requirement for decontamination to a minimum.

As the NBC threat increases, commanders should consider dispersing their units over a larger area. However, even with a greater dispersion, units must still be able to defend against the conventional threat. When CSS elements disperse, they must ensure that their support mission continues. In addition, every effort must be made to reduce the CSS vulnerability to enemy rear attack. Smoke and obscurants increase the survivability for many critical logistics activities. Smoke provides countermeasures to enemy reconnaissance, surveillance, directed energy weapons, and target acquisition. Some activities that would benefit from the use of smoke are fast refuel operations, ATP reconstruction, and decontamination operations. MSR security and engineering sustainment operations would also benefit from the use of smoke.

Equipment decontamination and smoke support are available from the division chemical company and corps assets. Supporting teams from the division chemical company may be attached to DISCOM units depending on the existing situation and threat.

NBC PLANNING

CSS plans for NBC operations must be flexible and, as basic information of interest to tactical commanders, must receive wide dissemination. NBC operations require increased emphasis on —

- Conducting vulnerability analyses.
- Avoiding contamination.
- Establishing priorities for decontamination support. This is done in coordination with the MMC chief.
- Providing guidance on the planning and execution of surveys following NBC attacks. Results of these surveys may affect support operations in the division area.
- Planning for alternate methods of CSS. Interruptions in the LOC must be anticipated.
- Balancing of the need for increased movement against the capability to perform the mission.
- Continuing CSS with reduced resources.
- Making changes in basic loads.
- Planning to augment the CSS capability by the addition of NBC decontamination teams as required.
- Providing for rapid augmentation or movement of medical units, on-site emergency treatment, and timely evacuation of large numbers of patients.
- Controlling traffic to prevent development of potential targets resulting from traffic congestion.
- Planning for the rehabilitation of critical routes as soon as possible after damage.
- Planning for the timely procurement of civilian resources (manpower and materiel) to supplement division capabilities for security and CSS functions.
- Planning for the time constraints of operating in an NBC environment. Support operations are slowed in an NBC environment. Some activities may be temporarily stopped. This occurs because individuals must work in MOPP-4. In addition, units modify support operations in order to control and minimize contamination.
- Responding to the increased demand for individual and unit NBC defensive items of clothing, equipment, and supplies.

COUNTERING NUCLEAR WEAPONS OR CHEMICAL/BIOLOGICAL AGENTS

When the enemy uses nuclear weapons or chemical/biological agents, unusual demands are placed on all CSS activities. These demands and the measures to counter them are discussed in the following paragraphs.

SUSTAINING THE SOLDIER

In an active NBC environment, DISCOM units reduce division stockage to the lowest level needed for mission accomplishment. This allows for maximum

mobility, dispersion, and contamination avoidance. Forward units carry full basic loads and protect themselves against contamination to allow units to accomplish their missions until they can be resupplied. Supply personnel issue the most critical supply items to the division on a preplanned push basis. Emergency resupply may be by air. Supply personnel disperse and cover reserve stocks to avoid presenting lucrative targets and to minimize the risk of destruction or contamination.

In an active NBC environment, DISCOM personnel should frequently test for contamination of supplies and logistics operational assets. Continuous monitoring is desirable. Supply personnel use containers made from composite materials to package supplies. They issue the containers in protective overwrap. The overwrap prevents liquid contamination of the contents and allows easy decontamination of the containers. Supply personnel do not normally issue contaminated stocks. They segregate them from clean stocks until they are fully decontaminated.

In emergencies when no other stocks are available, they may issue certain contaminated supplies. However, they issue contaminated supplies only if it would give the receiving unit a decisive tactical advantage. They issue contaminated supplies first to units similarly contaminated. Only under the most dire circumstances would they issue contaminated stocks to an uncontaminated unit. The issuing and receiving commanders jointly make the decision to issue contaminated items. Supply personnel make every attempt to avoid unnecessary spread of contamination. They clearly mark contaminated stocks using standard NBC markers.

Supply personnel do not normally provide preplanned Class I resupply to units operating in or near contaminated areas. Units carry enough MREs to conduct operations without daily resupply. Units store rations under protective coverings or in containers to prevent or reduce contamination. They limit decontamination efforts to removing the containers and carton overwrap. They normally do not use rations that are contaminated. Supporting chemical units and medical personnel can provide technical assistance and advice on the use of rations.

Selected Class II items, such as chemical defense equipment, receive priority of issue to selected units on an NBC battlefield. The commander gives highest priority support to units located in contaminated areas. The next priority is to units deployed in forward areas.

Supply points do not issue and units do not use contaminated water. If a water source is suspected of contamination, personnel mark it with standard NBC markers and do not use until it is tested, treated with an ROWPU if necessary, and determined to be safe to use. Whenever water becomes contaminated and cannot be treated for drinking purposes, personnel dispose of it in a manner that prevents secondary contamination and mark the area appropriately. They monitor all water treatment, storage, and dispensing equipment frequently for possible contamination.

Multiple nuclear attacks from high-yield-nuclear weapons or chemical/biological agents will have a heavy impact on available HSS. Advanced stages of MOPP result in heat buildup and reduced mobility. There will also be a degradation of speech, sight, touch, and hearing. This will degrade individual and unit operational effectiveness and productivity. Medical units require augmentation commensurate with the threat to continue in an NBC environment.

When an operation is planned, the division surgeon reviews current health and radiation exposure status of units involved and the exposure predicted in the commander's plan. The division surgeon gives the commander general estimates of the –

- Reduction in effectiveness of personnel due to exposure to radiation.
- Number and time-phasing of casualties that may occur.
- Increases to the medical work load and the requirements expected of the medical units.

Contamination is one of the major problems in providing medical support in an NBC environment. To increase survivability and supportability, medical units should take necessary action to avoid contamination. This lessens the initial effects of nuclear weapons. They should protect medical supplies and equipment from contamination with chemical agent resistant coatings or protective coverings. They should disperse Class VIII stocks to prevent or reduce damage or contamination caused by NBC weapons. They should decontaminate contaminated items prior to issue to using units.

Each physically capable individual is responsible for carrying out required decontamination of himself and his equipment as soon as possible. Decontamination stations need to be established and conveniently located for the flow of patient traffic at MTFs. See Figure B-1. Patients should be decontaminated prior to evacuation

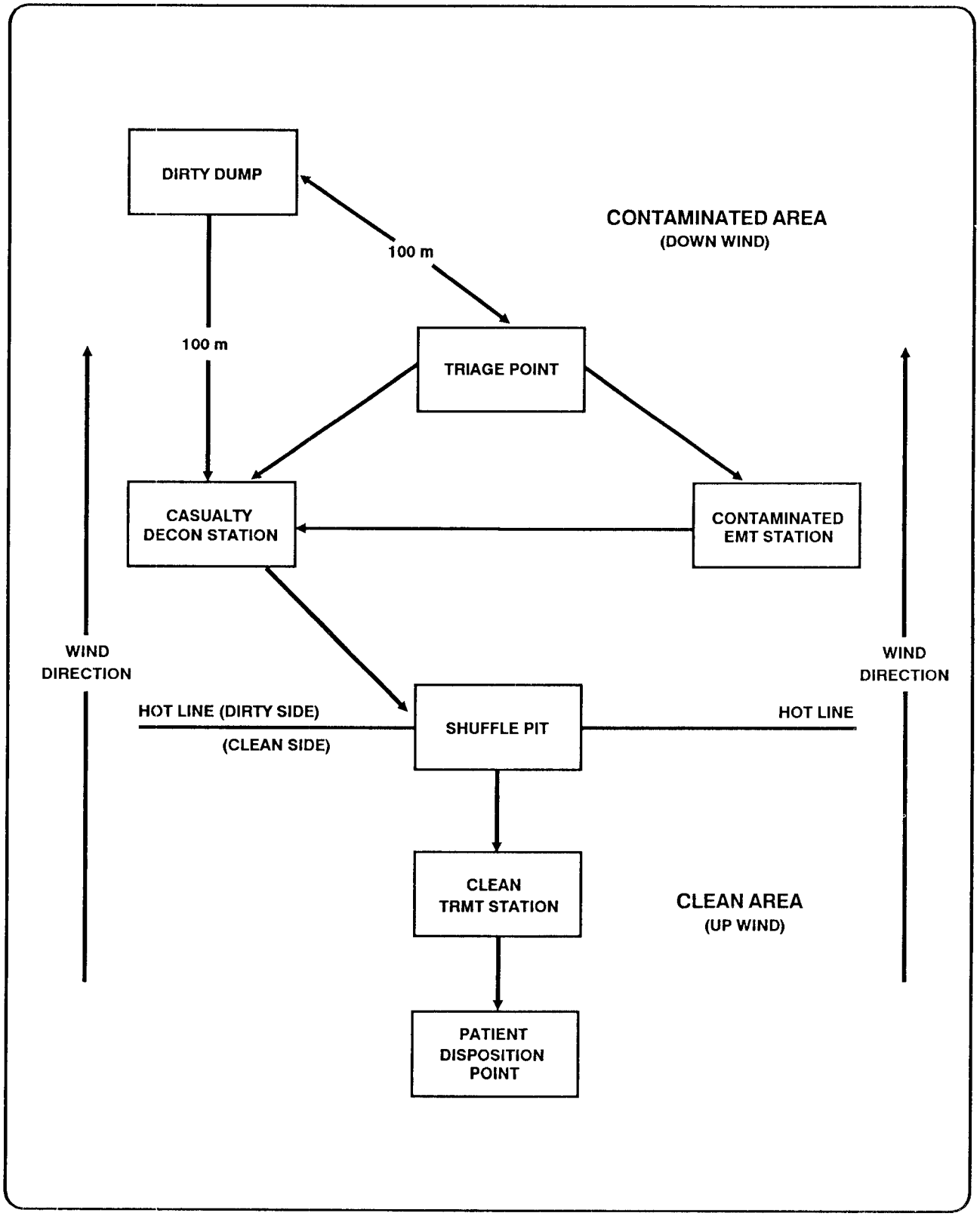

Figure B-1. Health service processing station in an NBC environment.

by aircraft or ground vehicles. Medical units are responsible only for the decontamination of patients who have reached medical facilities and are unable to perform self-aid. If medical units are responsible for decontamination of patients, augmentation decontamination support is essential. A significant degradation of medical support results if evacuation personnel have to man decontamination stations. Personnel do not admit patients to MTFs in clothing or blankets known to be or suspected of being contaminated. Decontamination, however, does not deter treatment being provided in life-threatening situations. Contaminated patients are treated in contaminated treatment areas.

Medical personnel base treatment and evacuation of NBC patients upon manifested signs and symptoms. SOP govern the use of prophylactic measures following known or suspected agent attacks. Following a nuclear attack, individuals who suspect radiation injury may reach the treatment facility to seek medical attention. Suspected nuclear radiation injury alone, without specific symptoms and physical findings, does not justify evacuation. Ordinarily, in nuclear and conventional warfare, burns and traumatic injury are the basis for early medical care and evacuation.

In an NBC environment, special GRREG task groups are formed. They identify remains generated due to NBC warfare. They tag these remains with an international NBC tag and inter them at a site within the contaminated area. They mark the site with the standard international marker. They record locations and site layout in accordance with standard procedures and FM 10-63. Normally, they do not evacuate contaminated remains to a GRREG collection point. If remains are evacuated, GRREG personnel (in MOPP gear) place them in chemical protective remains pouches. These pouches are marked with the type and date of contamination. They handle and decontaminate remains in accordance with FM 3-5 and FM 10-63. Recovery and decontamination of remains for final disposition are accomplished after hostilities cease or if the tactical situation, time, and other resources permit.

Commanders curtail renovation operations in an NBC environment in favor of higher priority missions. In addition, except for clothing decontamination and critical functions such as hospital service, they curtail laundry service in an active NBC environment.

ARMING THE FORCE

Selected high-usage Class IV items come in consolidated shipping containers for protection against NBC effects. This reduces handling and allows for responsive support. Supply personnel may issue contaminated or partially decontaminated Class IV items when properly identified. The user decontaminates contaminated Class IV items.

In NBC conditions, supply personnel separate Class V supplies from other commodities and keep them as mobile as possible. Protective covers lessen exposure to nuclear and chemical contamination. They resupply at night as much as possible. Ammunition support elements are responsible for decontaminating ammunition under their control, although large-scale decontamination may require additional support. If the situation requires the issue of contaminated stocks, supply personnel use the standard NBC marker. After issue, the user performs required decontamination. ATP personnel should be prepared to operate in contaminated areas if sites cannot be decontaminated.

FUELING THE FORCE

Class III is critical in an NBC environment. In emergencies, corps units may have to deliver directly to tactical units and forward arming and refuel points. Emergency resupply to isolated units may be by air. Supply personnel disperse storage locations and activities. They protect ancillary equipment to the same extent as major items of equipment. Storage tanks and bladders protect bulk petroleum to a large degree. However, supply personnel take precautions to reduce contamination on tanks and bladders.

FIXING THE FORCE

Avoiding contamination of equipment is easier than decontaminating it. Decontamination is time-consuming and it causes corrosion and damage to some types of equipment. Providing overhead cover for equipment and supplies significantly reduces liquid contamination of such materiel.

Using units decontaminate their own equipment within their capabilities. Equipment turned over to maintenance personnel should be as free of contamination as the using unit can make it. When using units are not able to decontaminate equipment, they should mark the equipment with the type and the date/time of contamination. If feasible, they should mark the specific areas of equipment contamination to alert maintenance personnel of the danger. They should also segregate contaminated materiel.

When using units cannot decontaminate damaged or inoperable equipment that is critical to the battle, maintenance personnel prepare to repair it at a

contaminated MCP. Establishment and use of a contaminated MCP limits contamination and consolidate contaminated repair assets. A contaminated MCP is similar to a hasty decontamination site. It should be far enough forward to limit the spread of contamination, yet far enough back to buy time for MOPP-4-clad mechanics.

In NBC conditions, corps heavy materiel supply companies are responsible for decontamination of Class VII items before issue. If supply points have to issue contaminated items, the receiving unit is responsible for decontamination. Prior to issue of contaminated items, supply personnel affix the standard NBC marker to the items. They make every effort to avoid abandoning Class VII items due to contamination.

In NBC conditions, personnel salvage only critical items in short supply. They salvage items that are contaminated but critical to return a major weapon system to operation upon command approval. They mark items that cannot be decontaminated with standard NBC markers.

MOVING THE FORCE

Nuclear attack presents a variety of problems for the DISCOM transportation system. For example, blown-down trees block routes, and radioactivity makes areas impassible. EMP generation disrupts communications.

Chemical attack causes unique problems as well. The corrosive nature of some chemical agents destroys or makes inoperative some types of equipment. The efficiency of mechanics, equipment operators, and support personnel decreases as they work in MOPP gear. The forward delivery concept places large numbers of vehicles in the division rear and brigade areas. Chemical contamination of these assets drastically reduces transportation capabilities because they cannot return to populated rear areas until detailed decontamination is completed. The time required to decontaminate, coupled with probable shortages of decontamination supplies and equipment, causes spot shortages of vehicles.

Delivery of contaminated cargo is normally made only to similarly contaminated units. If cargo becomes contaminated in transit, drivers immediately contact the TMT commander or the MCO for disposition instructions. They contact the DMMC and determine if the cargo is to be delivered to the original consignee. However, if the cargo is in the area of the receiver, and the receiver is known to be contaminated, contact is made with the receiver to determine if the cargo is essential and must be delivered immediately as is. It is the receiving unit's responsibility to decontaminate "dirty" cargo.

Drivers do not move contaminated cargo over "clean" routes unless combat need dictates otherwise. Planners route movement of "clean" cargo to bypass contaminated areas. If bypass is not possible or practical, material is airlifted if time permits. Transfer points are established on the fringes of contaminated areas where "clean" cargo is transloaded onto "dirty" equipment.

In short, time is lost. To compensate, the MCO should constantly plan for the worst. Alternative routes should always be available. Backup modes should be available for critical supplies. Cargo visibility should be constant, and the MCO should be able to identify and divert critical material at any time. Plans and supplies for decontamination should be available. FM 3-5 and FM 3-100 provide further information on NBC decontamination and operations.

Requirements for airdrop increase significantly on a nuclear or chemical battlefield. Air delivery expedites resupply and provides a swift means to bypass contaminated areas. Personnel check all air-dropped supplies and equipment for contamination. If contaminated, they decontaminate them before further processing. They mark items which remain contaminated with a standard NBC marker. Whenever rigging takes place in a contaminated area, they mark all supplies and airdrop equipment with standard NBC markers and advise air crews. FM 100-27 contains more information on airdrop, Airdrop planning factors are in FM 101-10-V2.

Appendix C

Heavy/Light Mixes

CONTENTS PAGE

HEAVY/LIGHT OPERATIONS C-1
SUPPORT DIFFERENCES C-1
SUPPORT TO SPECIFIC MIXES C-4

HEAVY/LIGHT OPERATIONS

Effective integration of heavy and light forces maximizes the capabilities of each. The term "heavy/light mix" is used generically in this discussion to include any integration of heavy and light forces. Specific mixes are addressed at the end of this appendix.

Forces are categorized as heavy on the basis of their ground mobility. They include mechanized infantry, armored, and cavalry forces. Heavy forces are best employed where battles are fought over wide areas of relatively unrestricted terrain. Engagements are fast moving and cover large areas of the battlefield.

Light forces provide strategic flexibility through their capability for rapid deployment. Light forces have limited mobility and firepower. They rely on concealment and sudden, violent action. In close terrain, they can deny the enemy unhindered movement. Light forces are most effective when given an offensively oriented mission. Sustained operations or operations in a high intensity environment will require augmentation of light forces.

Planners must understand the differences in support concepts and organizations between heavy and light forces to build the proper support package. Relationships, responsibilities, and procedures must be coordinated and clearly defined as the heavy/light force is being developed.

SUPPORT DIFFERENCES

Due to differences in force structure, equipment, and tactical doctrine, the support structures and doctrine for heavy forces differ from those for light forces.

COMMAND AND CONTROL

Except for the infantry division (National Guard), the C2 structure of the light DISCOM is fundamentally different from that of the heavy DISCOM. The heavy DISCOM has an MSB in the DSA and an FSB in each BSA. The MSB gives the customer in the division rear (other than aviation brigade elements who also receive support from the aircraft maintenance company) one support battalion to provide all DS-level logistics and HSS. Likewise, in the brigade area, customers have a single point of contact for DS-level support through the FSB. This structure provides a battalion commander and staff to coordinate rear operations in the BSA. The infantry division (National Guard) DISCOM is organized along the lines of a heavy DISCOM.

The other light DISCOMs are functionally organized with S&T, maintenance, and medical battalions. Forward companies from each battalion locate in each BSA with a forward area support coordinating office from the DISCOM HHC. Together these companies and the coordinating office make up the forward area support team. The FASCO coordinates the efforts of the FAST. However, command and control of the companies is retained by the parent battalions. A redesign of the LID DISCOM is evolving. LID employment doctrine has evolved to include split division operations and cross attachments with other forces. To enhance command and control, especially when a brigade-size task force is separated from its parent division or when operations continue for prolonged periods, the field commanders sought a transition to a design with multifunctional support battalions and centralized materiel management. The redesign calls for the LID to have a DISCOM structure like the heavy DISCOM with an MSB, three FSBs, and a DMMC.

The heavy DISCOM is more adaptable to heavy/light mixes because of the FSB. C2 is more defined when there is one support battalion associated with each maneuver brigade. If a brigade of a heavy division is task-organized to a light division, the associated FSB will accompany the brigade. This FSB will carry with it reinforcing assets from the MSB and perhaps the

COSCOM. Likewise, if a heavy battalion is task-organized to a light brigade, the bulk of the support assets to accompany it will come from a single battalion. The battalion is that FSB associated with the battalion's parent brigade. However, the light divisions do not have forward support battalions. Support to any light force being task-organized to a heavy force will require elements of all three functional battalions. If the task organization is a light brigade with a heavy division, the associated FASCO/FAST will accompany the brigade along with additional assets. However, the FASCO office is not a battalion staff. The FASCO is not staffed with enough personnel to provide continuous C2 of the FAST for an extended period.

Regardless of the command and control relationship, information must flow from the deployed unit to the controlling headquarters. This information includes —

- Critical fuel and ammunition requirements.
- Status of each class of supply.
- Maintenance requirements and backlog.
- Class IX requirements and availability.
- Movement requirements and available transportation assets.
- Availability of medical treatment and evacuation assets.
- Locations of support elements.
- Status of support personnel.
- Anticipated support problems.

ARM

Under MOADS, the system for distributing ammunition is the same for the heavy and light divisions. The DAO in the DISCOM HHC/MMC is responsible for managing ammunition throughout the division. There is an ATF in each BSA operated by the DISCOM. There is also an ATP in the DSA operated by the nondivisional DS company. The goal for both types of divisions is 100 percent throughput of ammunition to the BSA ATP for units operating in the brigade area. The types of weapon systems differ significantly among divisions. However, the process of managing and replacing them remains essentially the same.

In heavy divisions, the forward ATP is organic to the FSB. In light divisions, the forward supply companies of the S&T battalion operate the ATPs. A major consideration, however, is in the weapon systems used i n each division. These different weapon systems drastically affect ammunition consumption factors. Planners at the unit level and in the DISCOM must be aware of the major differences in the ammunition consumption of the different divisions. FM 101-10-1/2 details the consumption factors for each type of force. Another concern centers on ground transportation available for emergency distribution of ammunition. In the light division, ground transportation assets are much more austere than in the heavy division.

Until MOADS is fully implemented, there are other differences among divisions in ammunition resupply. First, all DISCOMs except the LID DISCOM operate an ATP in the DSA. LID elements in the division rear typically have to pick up ammunition at the nearest ASP. In addition, even before MOADS is implemented, the LID relies on loads configured for LID units by the nondivisional DS company.

FUEL

In all divisions, bulk fuel is pushed to division Class III points. The quantity delivered is based on fuel forecasts and status reports. Each division operates Class III points in the DSA and each BSA, and the Class III section of the MMC manages Class III supply. In addition, aviation fuel in each division comes directly from EAD to the division aviation brigade.

The major fueling differences among divisions center on the different types and quantities of equipment, FM 101-10-1/2 shows the differences in consumption. As a result, differences exist among divisions in assets available for the storage and distribution of bulk fuels. All divisions rely to some extent on throughput of fuel to the BSA Class III points. However, there are no assets in the LID to provide additional resupply of forward Class III points from the DSA. Also planners supporting any elements of the air assault division must take into account large aviation fuel requirements.

Supply point distribution is the primary distribution method used in most situations. However, variations do exist in distribution techniques. In heavy divisions, the FSBs use their 5,000-gallon tankers to provide forward refueling. This is discussed in FM 63-20. The LID FASTs, however, must deliver fuel to light infantry battalion trains. The reason is that the battalions do not have sufficient organic capability to go back to the Class III point and pick up fuel.

In all divisions, packaged petroleum products are handled by the Class II, III (packaged), IV, and VII

points. Customers submit requests for products as required to their supporting supply point.

FIX

All DISCOMs are responsible for performing DS maintenance, reinforcing unit maintenance, and Class IX supply operations for their supported units. Management of Class IX and DS maintenance operations is performed by the MMC. Beyond these similarities, however, the organizations and concepts for fixing the force vary widely among divisions.

In the LID, minimal DS maintenance is performed in the brigade sector. The bulk of the DS maintenance capability in the LID DISCOM is in the DSA. Even there, however, assets are austere. In the heavy and National Guard DISCOMs there are three maintenance companies (heavy, light, and missile) in the MSB. The airborne and air assault divisions have heavy and light companies in the DSA. The LID however, has only a main support company in the DSA. To compensate for the austerity of its DS maintenance capability, the LID relies on increased passback to EAD maintenance elements. The LID also relies on the use of replacement over repair.

Although all divisions require DS maintenance reinforcement from nondivisional units, the LID's reliance is greater. Two teams have been designated to accommodate the increased passback load associated with the LID. The LID maintenance support team and missile maintenance team are modules assigned to the nondivisional maintenance company. These teams must deploy soon after the division does in order to provide required sustainment. They may be attached to the LID maintenance battalion.

The LID also relies on replacement or exchange over repair. The exchange concept includes both reparable exchange and use of operational readiness float. Selected critical items maybe included as ORF items. These items are exchanged for customers' unserviceable items. ORF is used in those cases where the DISCOM cannot repair the items expeditiously. In developing an ORF, planners must consider the austere transportation assets of the LID. Items which may be appropriate include such items as small arms, radios, and small generators. In addition, the missile maintenance concept for the LID depends on exchange of LRUs and passback to nondivisional elements for repair.

Like ground and missile maintenance, aircraft maintenance in the LID differs from other divisions. The LID design includes the acceptable risk associated with an austere AVIM capability in the division and increased passback to EAD elements. An AVIM team has been designed to handle the additional passback in the LID. The other DISCOM with unique AVIM capabilities is the air assault DISCOM. Due to the number of helicopters in the air assault division, the DISCOM has an aircraft maintenance battalion with two AMCOs.

Fixing the heavy/light force is a significant challenge. Differences in the types and densities of equipment result in problems in Class IX and in repair capabilities. Heavy/light mixes with LID elements are particularly difficult to support. The entire maintenance concept is unique, as discussed above. As a result, assets are extremely limited. In many cases, the relevant LID maintenance unit has only one or two repairers in a particular MOS. So repair capability cannot be split in thirds to provide support when a light infantry battalion is detached from its parent brigade or a light infantry brigade is attached or assigned to another division.

MOVE

The characteristic which distinguishes heavy forces from light forces is ground mobility. Dismounted infantry in all light divisions have extremely limited ground mobility. The air assault division is designed with significant air mobility. The infantry division (National Guard) has some organic ground mobility in the form of its armored and mechanized infantry battalions. However, all infantry forces were designed to be employed in situations that do not require substantial ground mobility. If the light element of a heavy/light mix is required to have significant ground mobility to keep pace with the heavy element, additional transportation assets will be provided. However, tactical planners must ensure that light elements are not being employed in situations that do not take advantage of their specific capabilities. No DISCOM transportation organization is designed to provide assets for tactical moves and at the same time perform its CSS mission.

Movement is inherent in all CSS functions. It is integral to the arm, fuel, fix, and sustain the soldier functions. In that sense, several CSS movement considerations for heavy/light mixes have already been addressed. Examples include differences in bulk fuel and emergency ammunition distribution.

Some aspects of CSS movements are the same in all DISCOMs. Every DISCOM has an MCO in its headquarters. The MCO is responsible for movement management support. He does this through control of and employment of the DISCOMs motor transport assets for CSS. Specific responsibilities and functions of the MCO previously addressed in this manual apply to all divisions. Similarly, the primary transportation unit for all DISCOMs is the transportation motor transport company. (This is in addition to the assets organic to the functional companies to perform their primary mission.) In the heavy and infantry divisions, the TMT company is organic to the MSB. In the other light divisions, the TMT company falls under the S&T battalion. Trucks are used to move general supplies from the DSA to the BSA. They also transport reserve supplies and help in displacing division units that are less than 100 percent mobile. However, the assets to perform the mission vary widely among divisions. The support concept for the LID is based on prepackaged loads being throughput to forward areas. Heavy forces having to support light elements require COSCOM support in packaging loads and moving them directly to forward areas. Light forces in general also rely more on aerial delivery. In addition, the LID maintenance concept of reliance on replacement forward depends on extensive backhaul of unserviceable components and end items.

Another important difference between heavy and light TMT companies is that heavy DISCOMs have HETs. HETs are used to move and evacuate tanks and other pieces of heavy equipment on the battlefield. Planners must ensure that HETs accompany any heavy force task-organized to a light unit.

Like fixing moving the heavy/light force represents a considerable challenge. The two types of forces have very different mobility requirements and transportation assets. When a light force is task-organized to a heavy one, transportation for tactical and CSS movements must be provided by EAD assets. When a heavy force is task-organized to a light unit, it must bring with it its share of transportation assets, including HETs. The light force, if it must support a heavy element, will need significant augmentation to handle the large requirements for such items as bulk fuel and ammunition.

SUSTAIN THE SOLDIER

Sustaining the soldier involves providing HSS, food, water, clothing, and field service support. The systems for sustaining the soldier are similar among divisions.

HSS systems are adaptable to heavy/light mixes because of the modular support concept. The organization of the individual modules will always be the same. However, the types and quantities of modules vary among the divisions. The battalions under which the medical companies fall also vary among divisions. Medical management is performed by the division medical operations center in the heavy division and by the medical battalion staff in the light division. The modular system allows for easy reinforcement and cross-attachment of medical elements. Some of the differences in the divisions include the absence of tracked ambulances in the light divisions, the presence of air medical evacuation assets in the air assault division, and the lack of a surgical capability in the LID.

Subsistence support is also similar. Class I is pushed to the division on the basis of personnel strength reports. The LID, unlike the other divisions, depends on throughput of subsistence from EAD to the Class I points in the BSAs. Its TMT company is not structured to transport subsistence from the DSA to the BSA.

Water assets in all DISCOMs are centralized. In the heavy division water is the responsibility of the S&S company in the MSB. In the LID water responsibility rests with the headquarters and supply company of the S&T battalion. The concept for water supply is the same for all divisions. However, in the LID, the DISCOM delivers water to the trains of the light infantry battalion. If a LID element is task-organized to a heavy force, assets to make such deliveries must be included. Light infantry battalions do not have organic assets to go to a water point to pick up water.

Light DISCOMs, with limited transportation assets, stock limited clothing and other Class II items. In particular, the LID's stockage is limited to only essential items. Selected items, such as NBC overgarments, may be provided as preconfigured unit loads. Heavy forces supporting LID elements must be aware of this dependence.

SUPPORT TO SPECIFIC MIXES

When a specific heavy/light mix is developed, the directing headquarters designates the command relationship. The differences in support concepts and organizations discussed above must be carefully considered.

What follows here is a general discussion on several types of mixes the DISCOM may have to support. Command relationship recommendations are included. However, these are only recommendations. The commander must select the most appropriate relationship after considering at least the following factors:

- The size and mission of the force.
- The distance of the deploying force from the support base of its parent unit.
- The support capability of the receiving force. This capability is particularly important to consider in the case of light forces since the different types have significantly different support capabilities.
- The relationship between the deploying support element and the receiving unit.
- The source of support for each force.
- The self-sustaining capability of the deploying force.

In the case of light force elements being task-organized to heavy forces, planners in the heavy force must understand that light fighters are exactly that–light. The more they have to carry, the slower they move and the smaller the advantage of their relative mobility in restricted terrain. Heavy force support planners must recognize that providing too much support forward involves considerable risk. Light forces do not have the assets to move large quantities of supplies and equipment. The inability to move significant amounts of reserve stocks to support LID forces is a concern for CSS planners. Planners must establish a system that will rapidly supply packages of critical supplies to light units. These packages (which include Class IV items such as wire and survivability items) should be carefully planned in advance. The heavy DISCOM support operations branch must be involved in the support to light forces. It must coordinate for support from the COSCOM to configure unit loads for light forces. The DISCOM must also be ready to transport them forward quickly. Coordination also must be made to meet the light force's reliance on aerial resupply.

HEAVY BRIGADE TO A LIGHT DIVISION

The preferred option for such a mix is a heavy separate brigade OPCON to the light division. In such cases, the light division commander has tactical control of the brigade without the burden of administrative and logistics support. The separate brigade support battalion is designed to tie directly into the corps support base. The BMMC passes requisitions to the COSCOM MMC. Supplies are transported from COSCOM elements to support battalion supply points. Reinforcing maintenance, transportation, and HSS are also provided by the COSCOM. When OPCON to a light division the separate brigade support battalion must also establish coordination with the light DISCOM support operations section. This is done so that the DISCOM commander knows the support status of all units in the force.

The difference between a divisional heavy brigade and a heavy separate brigade OPCON to a light division is that the divisional brigade support channel is through the parent DISCOM. The separate brigade links directly to the corps. The OPCON of a divisional heavy brigade to a light division is a viable option under the following conditions:

- The mission is relatively short (48 hours or less).
- The parent heavy DISCOM can continue to support the mission performed by the remaining heavy division elements.
- The LOCs from the heavy brigade to the parent DSA are secure and not too extended. Overextended LOCs would prevent the DISCOM from meeting movement requirements.

The heavy brigade must come with its full complement of support assets from the heavy DISCOM. These assets typically include –

- The FSB associated with the heavy brigade.
- HETs with drivers from the MSB TMT company.
- Bulk fuel tankers with drivers from the MSB S&S company.

The support package may also include a water team from the MSB S&S company if the light division cannot support the brigade. There will also be a maintenance support team with essential ASL items from the MSB maintenance companies. This is only done if the heavy division MSB cannot provide responsive support to the operation from its DSA location. The MSB resources accompanying the brigade collocate with the FSB.

Coordination would still have to be established with the light DISCOM to keep it informed. In addition, planners should arrange to have support provided directly from the COSCOM to the supporting FSB whenever possible. For instance, subsistent and bulk fuel should be throughput from the corps to the heavy BSA as much as possible.

Attaching a heavy brigade to a light division is the least preferred option for this type of mix. This relationship requires the light division to support the heavy brigade. The major differences in support doctrine and organizations outlined above make the light DISCOM incapable of providing support without significant augmentation. The FSB with some MSB assets would still accompany the brigade as discussed above with the OPCON brigade. The MSB must provide to the maintenance company or companies in the light DSA repairers, tools, parts, TMs, and any other assets required to reinforce the FSB maintenance company in repair of following items:

- TOW/Dragon.
- Tracked vehicles.
- Wheeled vehicles.
- Turrets.
- Power generation equipment.
- Utility equipment.
- Quartermaster and chemical equipment.
- C-E equipment.

The light DISCOM also requires additional bulk fuel storage and distribution assets, Class IV supply resources, ambulances to evacuate casualties from the BSA to the DSA, and other transportation assets. Even with these resources, throughput (especially of Class I and III) from corps to the BSA should still be used whenever possible.

HEAVY BATTALION TO A LIGHT BRIGADE

The preferred option for mixes at this level is also OPCON. When OPCON, the heavy battalion task force continues to receive support from the heavy DISCOM. The key factor influencing this situation is the distance from the battalion task force to the supporting FSB. The supporting FSB can assist by operating a forward refueling point and ATP between the task force and the heavy brigade BSA. If distances are great, sustainment of the task force over an extended period becomes a major challenge. This is particularly true for maintenance, Class III, and Class V.

Support assets to accompany the battalion task force would likely include –

- The MST configured to support the task force from the supporting FSB. The team must include all required tools, communications equipment, mobility assets, and a slice of ASL items.
- Tankers with drivers from the FSB or MSB.
- HETs with operators from the MSB.
- Forklift and operator from the FSB supply company.
- Tracked ambulances with drivers to station at the battalion aid station.

Attaching a heavy task force to a light brigade is the least preferred option at this level. A light division forward area support team (or FSB in the case of the infantry division) is not capable of supporting a heavy battalion, even if accompanied by the package identified above. The FAST maintenance company normally lacks the assets necessary to reinforce the repair capability of a deployed MST. This is especially the case with the LID, which depends totally on exchange and passback in its maintenance operations. It also does not have the ability to assist in the recovery of task force assets. The light division does not have HETs to evacuate heavy equipment or move it around the battlefield. Equipment incompatibilities will complicate Class V and VII resupply. Also, the FAST supply company does not have the capability to handle the large amounts of fuel required by the heavy task force. To cross-level assets from the MSB/FSB of the parent heavy DISCOM would jeopardize the ability of the DISCOM to continue its support mission to the heavy division.

LIGHT BRIGADE TO A HEAVY DIVISION

Light forces must be employed in sufficient strength to create a reaction or tactical pause by the enemy. This typically requires light forces to be employed in division size. However, to capitalize on its advantages in close terrain, a light brigade maybe employed with a heavy division.

As with the heavy brigade to the light division, the preferred option would be a separate infantry brigade OPCON to the heavy division. As with the OPCON heavy separate brigade, the separate infantry brigade support battalion links directly to the COSCOM and coordinates with the heavy DISCOM support operations branch.

If a divisional light brigade is task-organized to a heavy division the preferred relationship is attachment. The reason for this is that the light DISCOM does not have the robustness, particularly in movement, to support a brigade over extended LOCs. The light DISCOM would be unable to continue to support the remaining light division elements. This is especially true for the LID.

The attached light brigade would be accompanied by assets from the light DISCOM. These assets would likely include the following

- FASCO from the light DISCOM HHC.
- Forward supply company from the S&T battalion.
- DAO representative from the DISCOM HHC.
- Forward maintenance company from the maintenance battalion.
- Forward support medical company from the medical battalion.
- Assets (repairers, tools, parts) from the DSA maintenance company or companies of the maintenance battalion (or MSB in the infantry division) of the light DISCOM. These provide required reinforcing support in several repair areas such as wheeled vehicles and power generation equipment. (However, the lack of robustness in the light DISCOM makes it impossible to provide a repair slice for every type of equipment.)
- Ambulances from the DSA medical company of the light DISCOM.
- Water team (if the heavy DISCOM cannot provide water support).
- Trucks from the TMT company.

(Note: Instead of the FAST elements listed above, the FSB would accompany a brigade from the infantry division.)

Even with these assets, the heavy division cannot sustain the light brigade without additional support from nondivisional elements. These would include additional trucks to provide required mobility and maintenance assets to handle increased passback. In particular, the heavy DISCOM does not have the required Class IX to support equipment that is unique to or in much higher densities in light forces. The 105 mm-towed howitzers and the 60-mm and 81-mm mortars are examples of such equipment.

The DAO in the heavy division arranges for a different mix of Class V t o be throughput to the ATP in the light brigade BSA. He coordinates with the DAO representative from the light DISCOM to manage Class V supply.

Assets from the maintenance companies located in the DSA and the TMT company would normally be attached to the appropriate company of the heavy division MSB. The FAST elements in the light BSA would likely be OPCON to the FASCO. This would be done because of distance between the companies and their parent battalion headquarters. However, there is a risk associated with this arrangement. Unlike an FSB which has a full battalion staff to supervise activities of the forward companies in the BSA, the FASCO staff is extremely austere.

This office was designed to coordinate the support activities of the FAST. It is not staffed to provide command and control, especially during continuous operations over extended periods. If the FASCO is to command and control the FAST, it will be necessary to augment the FASCO staff. Planners putting together the heavy/light task organization should look at augmenting the FASCO staff from the light DISCOM HHC or the staffs of the functional battalions.

LIGHT BATTALION TO A HEAVY BRIGADE

The preferred relationship for such a mix is again attachment. The supporting FSB faces the challenges discussed above. Even with reinforcement from its MSB, the support capabilities of the FSB are severely taxed in supporting a light infantry battalion. The supporting FSB (with reinforcement from the MSB) will be severely stressed if it has to provide the required mobility, repair capability (including Class IX) for light force equipment, Class V for light force weapon systems, and water distribution to the battalion if it is a light infantry battalion. Mobility is critical. To enable a light battalion to move rapidly over long distances as may be required in heavy/light operations, the battalion requires additional assets.

Resources accompanying a light battalion task-organized to a heavy brigade should include the following.

- A battalion share of the FAST maintenance company assets.
- Ambulances from the FAST medical company to position at the light battalion aid station.
- Trucks with drivers from the light DISCOM TMT company.

Additional maintenance and transportation assets should be provided to the MSB by the COSCOM to sustain the battalion.

OPCON of the battalion to the heavy brigade is the least preferred option. The reason is the lack of transportation assets to support movement over long distances.

Regardless of the command relationship, support planners must recognize that much unit support in a LID has been moved from the battalion to brigade level. This is done to keep the infantry battalion light and focused on its primary combat mission. The heavy brigade (and supporting DISCOM elements) cannot expect the light battalion to plan and coordinate support to the same extent as a heavy battalion. The brigade, and as much as possible the FSB, must be prepared to help the battalion plan and provide unit-level support.

Appendix D

DISCOM Operations in LIC

CONTENTS PAGE

LIC SUPPORT STRUCTURE D-1
SUPPORT FOR INSURGENCY AND COUNTERINSURGENCY D-1
COMBATTING TERRORISM D-1
PEACEKEEPING OPERATIONS D-2
PEACETIME CONTINGENCY OPERATIONS D-2

LIC SUPPORT STRUCTURE

The logistics and health service support structure for LIC operations depends on the situation. Support can range from a medical team providing humanitarian assistance to a full DISCOM with COSCOM elements supporting a division conducting military operations. If the division is the highest headquarters involved in LIC operations, the DISCOM deploys with the division and should plan to interface directly with the CONUS wholesale logistics system.

SUPPORT FOR INSURGENCY AND COUNTERINSURGENCY

The DISCOM role in support for insurgency and counterinsurgency may involve two types of support. First, it may have to support US military advisory teams. In other cases, it may provide support to the host country, including security assistance to help improve military and civil organizations. The G1/AG and the G4 coordinate with the G5 to determine how to use local resources to meet as many requirements as possible. If local resources cannot meet the support needs, small teams from a DISCOM (or other support element) may provide supply, maintenance, ammunition medical, and transportation support to indigenous forces. Although the immediate purpose is to assist indigenous tactical forces, the DISCOM's long-term objective is to develop a local capability to perform these tasks.

Advisory team support, needs that local resources cannot meet are likely to be minimal. If the US presence increases beyond small teams, the size of the support element also increases, and DISCOM planners must be prepared to employ additional elements.

The DISCOM may also have a role in providing humanitarian assistance as part of a counterinsurgency program (nation building or military assistance). If the force has the mission of humanitarian assistance, DISCOM planners must consider several factors:

- Size of the supported population.
- Deployment and redeployment plans.
- Approved command and control.
- Communications requirements and capabilities.
- Coordinated embassy/military public affairs plan.
- Local population customs and traditions, including dietary habits.

In some situations, DISCOM elements may have to assist in the maintenance of essential services. Water, sewage, and sanitation are especially important if there is a danger to public health. In the worst case, this could involve the direct control and operation of these essential services by DISCOM personnel. This may require special training for some soldiers prior to their employment. However, these responsibilities should revert to the civil authorities as soon as possible.

COMBATTING TERRORISM

Combatting terrorism involves defensive (antiterrorism) and offensive (counterterrorism) measures required to meet the evolving terrorism threat. Divisions are not likely to participate in combatting terrorism. However, DISCOM forces deployed to a LIC environment need to take antiterrorism measures as well as measures to protect supplies, personnel and LOCs. FM 100-20 and FM 100-37 discuss these measures.

PEACEKEEPING OPERATIONS

Division forces may participate in a peacekeeping force. If so, the DISCOM uses normal support operations as much as possible. An austere base development and a mixed military/civilian contractor support structure may characterize the support environment. Host-nation support, however, may not be a significant support factor. Political considerations derived from the nature of PKO itself may affect host-nation support.

In PKO planning, the G3, with the G1/AG and the G4, identifies division units requiring support and the necessary support packages. For example, they must plan for sufficient transportation assets to rapidly relocate peacekeeping forces. If additional transportation is required beyond the organic assets of the peacekeeping force, they must plan for the required augmentation well in advance.

Supply support for a deployed peacekeeping force requires longer order-ship times for surface shipments. The DISCOM must be involved in planning initial supply support well in advance. Stockage of repair parts and other supplies must be at a level that supports a deployed force for an extended period. Self-service supply items are also required. The DISCOM may need to help coordinate contractor support for fresh food supplies and dining facility operations. Prior planning and coordination are essential to arrange for supplemental rations. Planners must ensure sufficient veterinary inspection support is available to monitor local purchase activities. In addition, members of the force on remote patrol may require MREs or other combat-ready meals. Also, because DISCOM elements may have the mission of supporting all members of the PKO force, they must consider the type and contents of certain foods for religious or cultural reasons.

Water supply may be included in an overall custodial contract, obtained from local sources, or provided by water purification/distribution units, such as those in the DISCOM. Preventive medicine personnel test and approve all water prior to distribution.

Due to the limited assets within the DISCOM, the division may require corps assets to assure a dedicated transportation capability and to provide the necessary flexibility and mobility to the supported force. Host-nation or third party contract assets, however, should be used whenever possible. If US vehicles are used, vehicle operators may need local or international driver licenses. Also, the DTO and MCO must examine the road network before the force arrives in country. Planners require up-to-date information on all roads and bridges. This must include information on the main supply routes and restrictions on vehicles (such as convoy size, weight of vehicles, and times that roads can be used).

DISCOM medical elements support PKO operations as part of a single health service assistance program. Their primary mission is to provide HSS to the peacekeeping force. The responsibility for all overall medical planning rests with the division surgeon. The division surgeon coordinates any medical support to host-country nationals.

PEACETIME CONTINGENCY OPERATIONS

The division commander is responsible for determining the desired sequence of deployment for peacetime contingency operations. The division commander will determine the tactical force, supporting elements, fillers and replacement personnel, and bulk supplies needed for PCO. The DISCOM coordinates the deployment of its units and recommends changes in the deployment sequence if the force does not remain balanced. In some cases, DISCOM elements may arrive in the country or an adjacent country before tactical forces. In other cases, only support elements may deploy.

In any case, before execution of the deployment, planners must arrange for feeding, fueling, arming, fixing, and loading the force at the staging base. Due to the unique aspects of PCO (such as short duration and possible bare base conditions), certain support activities and management functions may take place at the CONUS support base. Forces use operational readiness float to maximize readiness prior to deployment. Also, planners must identify the source of supply early. It may be CONUS, designated OCONUS, or third country sources.

In the development of the composition and deployment sequence of DISCOM elements, a primary consideration is the availability of local resources, particularly fuel, transportation, facilities, labor, and services. The contingency force should take full advantage

of any applicable host-nation agreement, as well as local purchasing and contracting.

Certain DISCOM elements must deploy early in support of PCO. The first elements to deploy must handle Class I, III, and IX, and water as well as critical transportation, maintenance, and HSS assets. As mentioned above, if applicable, qualified personnel authorized to purchase goods and services, to let contracts, and to render payment also deploy early.

The force enters the area with accompanying supplies, which represents the first phase of supply in a contingency operation. Accompanying supplies for a contingency operation should include basic loads of MREs and Class II, III, IV, V, and VIII items, and the prescribed load of Class IX items. DISCOM supply elements must be on the ground to handle the second phase of supply, which is follow-on supply.

Support elements use follow-on supply before the normal supply system is fully established and routine supply (the third phase of supply in contingency operations) can be initiated. Follow-on supplies can arrive on the first day. They include supplies that planners anticipate to be critical in the early phases of the contingency, such as fuel, food, medical supplies, and water (if it is not available locally). Planners estimate consumption of these items in advance, and support base personnel configure the items into prepackaged loads. Airdrop can be effective in follow-on supply operations to reduce ground movement requirements.

There are two kinds of follow-on supply– automatic and on-call. With automatic resupply, the prepackaged loads are delivered directly to forces on a preplanned schedule. On-call supply is an emergency resupply system to provide prepackaged loads for items with unpredictable consumption schedules.

During the build-up phase, the G1/AG, the G4, and the DISCOM commander must pay close attention to the number of support units in country. Many of the support units may be detachments, teams, and companies without a parent headquarters. In order to execute effective command and control, some elements of the DISCOM headquarters should arrive early to organize these smaller elements into a composite DISCOM. As the situation develops and more headquarters elements arrive, the temporary composite headquarters transitions to the normal DISCOM headquarters.

Appendix E

Sample Tactical SOP for the DISCOM Command Post

ANNEX_ (LOC/TOC ELEMENT) TO CP OPS, Tactical SOP, HVY DISCOM

1. **PURPOSE:** To prescribe the organization and operation of the LOC/TOC element of the heavy DISCOM CP.

2. **SCOPE:** Applicable to HHC/MMC, Hvy DISCOM.

3. **RESPONSIBILITY:** DISCOM S2/S3 Section.

4. **ORGANIZATION:**

a. The LOC/TOC element of the DISCOM will collocate with the division rear CP (see Figure E-l). The LOC/TOC will organize in a two-shift configuration to provide 24-hour-a-day operation.

b. The LOC/TOC will consist of personnel and equipment from the DISCOM command section (minus the S1, S4, and chaplain). The S2/S3 office, the plans-intel branch, the div spt ops branch, the MCO, the DMOC, and the division materiel management office will be represented.

c. Figure E-1 depicts the layout of the LOC/TOC for the DISCOM. The spt ops branch and the DMMO will share a 5-ton expandable van. The S2/S3 office, the plans-intel branch, and the MCO will share a 5-ton expandable van. The DMOC will operate out of a single 5-ton expandable van. These three vans will be backed up to a common platform/trailer which will also be used by the division rear CP. the command section works in and through each of the three vans. However, this section will also work out of the command briefing tent set up in the DISCOM LOC/TOC area.

d. The configuration shown in Figure E-1 allows for the necessary interface between the DISCOM staff and the division rear CP staff personnel, The division rear CP will be dependent on the DISCOM for security of the CP area.

5. **DUTIES:**

a. Command Section:

(1) Performs the specific duties of the commander and the personnel of the command section as detailed in Chapter 2, FM 63-2.

(2) Ensures that communications are established with subordinate units and that the DISCOM mission is working IAW the dictates of the division commander.

(3) Maintains coordination with the division rear CP. This is to ensure that DISCOM elements are positioned in the DSA according to the overall terrain management plan and that the base cluster layout is established IAW the division rear operations plan.

b. S2/S3 Office:

(1) Prepares the staff estimate and input for the S2/S3 section.

(2) Prepares DISCOM OPORDs/OPLANs.

(3) Directs the relocation and movement of subordinate units IAW the mission and the commander's intent.

(4) Establishes security procedures for the LOC/TOC.

(5) Maintains a daily log of all significant activities of the section.

c. Plans-Intel Branch

(1) Plans Element:

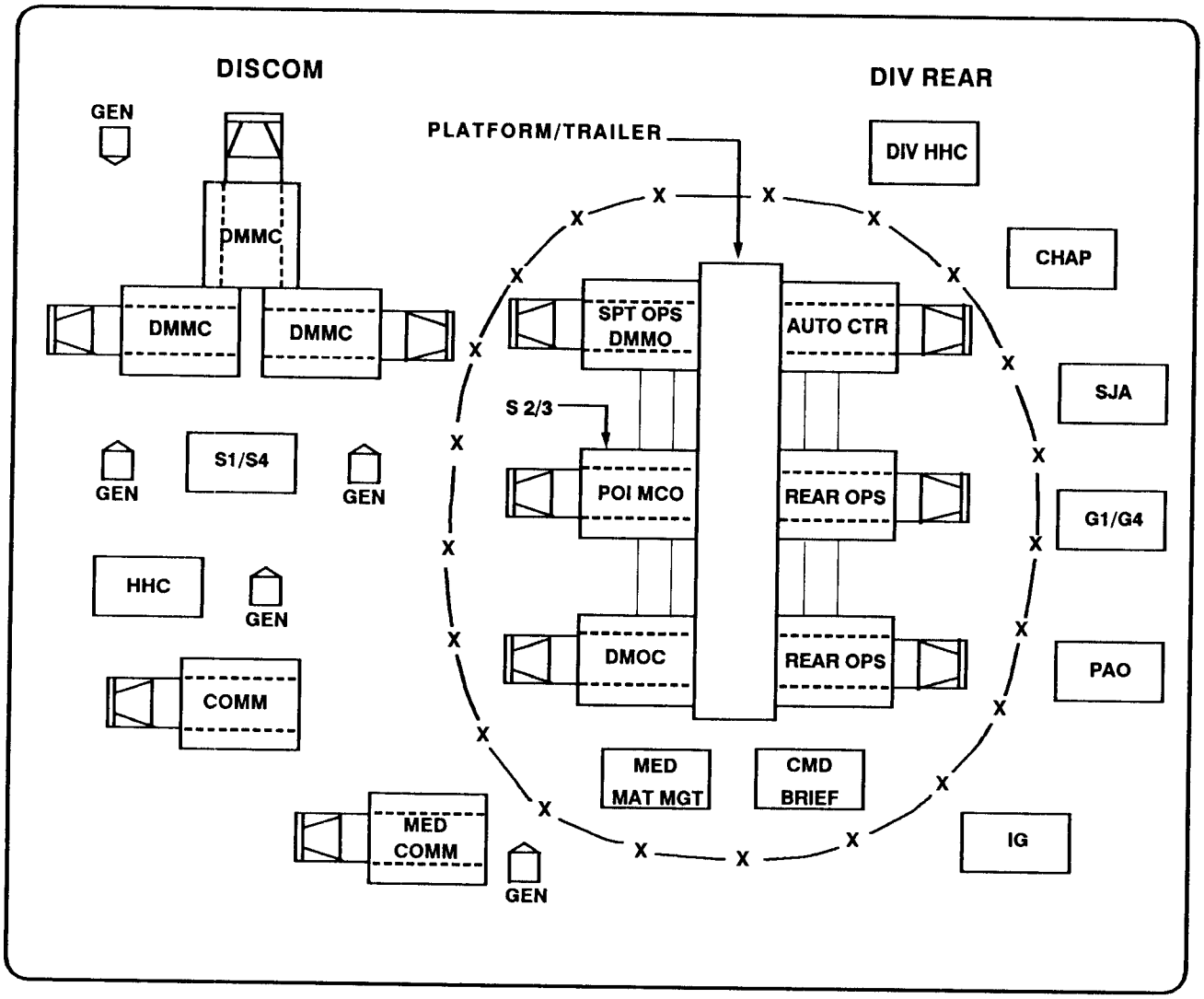

Figure E-1. Sample DISCOM command post.

(a) Determines the DISCOM tactical support requirements, less communications. It coordinates these requirements with the division rear CP.

(b) Directs recon and movement activities and prepares road movement orders.

(c) Organizes, briefs, and coordinates the activities of the advance/quartering parties.

(d) Prepares operations estimates.

(e) Briefs march column commander.

(f) Coordinates subordinate units crossing contaminated area(s).

(g) Selects and provides layout plans for all new or proposed locations for the section.

(h) Operates the LOC/TOC.

(i) Coordinates establishment of defense for DISCOM elements in the division rear. This includes the development of the base cluster fire plan and the fire support plan. It also includes the mobility and countermobility plan, the air defense plan, and the base cluster reaction force plan.

(2) Intel Element:

(a) Provides intelligence support.

(b) Plans and implements OPSEC for current and future operations.

(c) Determines status of OPSEC program.

(d) Develops and directs preparation for NBC defense plan.

(e) Directs all NBC operations to include friendly NBC strikes, radiological/chemical surveys, and all decontamination operations.

(f) Analyzes spot reports.

(g) Maintains a daily log of all significant activities for the section.

d. Division Support Operations Branch

(1) Determines DISCOM units' readiness to provide support.

(2) Identifies division CSS assets and requirements.

(3) Coordinates supply and maintenance operations and field service support. This is done with the MSB and FSB support operations sections, the MMC, and the COSCOM.

(4) Maintains a daily log of all significant activities for the section.

e. Movement Control Office:

(1) Coordinates transportation support with customers, MSB support operations section, and the DTO.

(2) Determines external movement support activities.

(3) Prepares movement planning data.

(4) Maintains a daily log of all significant activities for the section.

f. Medical Operations Center:

(1) Monitors all medical operations and advises the DISCOM commander on appropriate action.

(2) Coordinates all division-level medical support operations and services.

(3) Maintains a daily log of all significant activities for the center.

g. Division Materiel Management Office:

(1) Supervises management of maintenance operations.

(2) Supervises management of supply operations.

(3) Maintains a daily logon all significant activities of the office.

6. **INTERNAL LOC/TOC PROCEDURES:**

a. Plans and Orders:

(1) All plans and orders will be prepared and published by the S2/S3 section.

(2) OPLANs, OPORDs, FRAGOs, and warning orders will be distributed IAW direction of the commander. Distribution will be made through the S2/S3 section. This section will also maintain a minimum of five extra copies of all published orders.

(3) FRAGOs will be prepared in written format and issued (in priority of methods) by messenger/LO, FAX, FM, or RATT.

(4) Warning orders will be issued as soon as a divisional order is received and analyzed.

b. Maps and Overlays:

(1) Maps:

(a) The S2/S3 will order and stock a basic load of five sets of maps. Each set is for a potential area of operations. Two sets of terrain analysis maps will also be stocked.

(b) The LOC/TOC will operate with three sets of maps, each mounted on a map board. One will be used for operations, one for intelligence information, and the other as a briefing map.

(c) One set of maps will be assembled and used on jumps.

(d) Vertical and horizontal grid numbers will be highlighted in a color to be determined by the S2/S3.

(2) Overlays:

(a) The following overlays will always be prepared for each operation:

- *Operations Overlay.* Includes tactical boundaries and locations of all battalions, separate companies, and command posts. This overlay is maintained by the S2/S3 and hung at all times on the operations map. Control measures will be marked in black. Significant activities will be designated by the S2/S3. The date/time group of the most recent update will be posted in the upper middle of the drop.
- *Support Operations Overlay.* Includes MSRs and the current and projected locations of all facilities. It is maintained by the support operations branch and hung at all times over the operations drop on the operations map. The logistics facilities will be labeled with the date/time group of the opening and projected closing (if appropriate) above the symbol of that facility. The indication "O/O" will be used to indicate an on-order opening or closing.
- *Intelligence Overlay.* Includes all identified significant intelligence data and suspected locations of enemy units to include RAGs and DAGs. This drop is maintained by the plans-intel branch and is always hung on the intelligence map, All enemy positions will be outlined with a color designated by the S2/S3.

(b) All overlays will display three grid reference crosses. One will be positioned on the upper left, one on the lower center, and the third on the upper right of all drops. All drops will use the same locations. These references are placed on the overlays to ensure that they are properly positioned on maps being used by the sections to brief the operation.

(c) Overlays for OPORDs/OPLANs will normally be prepared on drop or opaque paper.

(d) All overlays will have in the upper right corner the standard OPORD/OPLAN heading.

C. Charts:

(1) The following charts will be maintained by the different sections and branches:

(a) *Significant Activities.* Maintained by the S2/S3 personnel. It will show critical tactical and logistics events.

(b) *Enemy Order of Battle.* Maintained by the S2/S3. It will indicate in list form the identified opposing enemy units and their estimated strength in percentages.

(c) Intelligence Incidents. Maintained by the plans-intel branch. It will be number coded to the location of incidents posted on the intelligence drop and will provide a one-line description of each incident.

(d) *LOC/TOC Security Sketch.* Maintained by the S2/S3. This chart shows the setup and security plan for the DISCOM CP base.

(2) The S2/S3 will ensure that these charts are maintained in the LOC/TOC at all times. Additionally, there will be five blank acetate covered charts for temporary use.

d. Warnings:

(1) All warnings will be by secure land or RATT passes with FLASH precedence.

(2) For STRIKEWARN or CHEMWARN, immediate dissemination is required. Whether the warning is issued with or without encoded desired ground zero coordinates depends on the time sensitivity for safety to US forces.

e. Briefings:

(1) Daily Update Briefing

(a) The XO will control this briefing held for the DISCOM commander and staff.

(b) The sequence will be as follows:

- XO.
- S2/S3.
- Spt Ops.
- S1.
- S4.
- Med Ops.
- DMMC.
- Other issues or unit representatives.

(2) Operations Order Briefing

(a) Each new OPORD or admin/log order will be briefed to the DISCOM commander and the subordinate commanders as soon as possible after completion.

(b) The S2/S3 will initiate the briefing using the following sequence: analysis of the area of operations, enemy situation and capabilities, weather, friendly situation, mission, and execution.

(3) Situation Update:

(a) When the DISCOM commander enters the LOC/TOC, the TOC duty officer will be prepared to update him on the current friendly situation, the current logistics capabilities, and the current enemy situation to include a summary of recent incidents.

(b) The same briefing will be provided to the S2/S3 and the XO after they have returned from long absences. Subordinate unit LOS will also be briefed.

f. Operations within the LOC/TOC:

(1) Shift Changes:

(a) Two shifts will man the LOC/TOC maintaining 24-hour operations IAW a schedule published by the S2/S3. Chapter 2 of FM 63-2 provides an example of a proposed dual-shift breakdown for the DISCOM.

(b) Outgoing duty personnel will thoroughly brief incoming replacements to completely familiarize them with all activities within their areas during the last shift. This briefing will include a physical review of the sections log, the log file, and the current operations and intelligence overlays.

(c) The on-duty shift is responsible for waking the replacement shift. The replacement shift is responsible for being present at the LOC/TOC no later than 30 minutes prior to start of their shift.

(d) The current shift duty officer will release outgoing shift members when he is satisfied that the incoming personnel are properly briefed.

(2) Communications:

(a) The LOC/TOC is the NCS for the DISCOM command.

(b) The LOC/TOC duty officer or NCO will monitor the division command net and maintain a daily log.

(c) The S2/S3 section will monitor the division O&I net and maintain a daily log.

(d) The LOC/TOC duty officer will ensure that the DISCOM command net is audible throughout the LOC/TOC and that a log is maintained.

(e) All incoming and outgoing messages and reports will be logged. Each will be marked with date/time group and a log entry number and then filed in the log support file.

(3) Guidance to be Followed by the LOC/TOC Duty Officer:

(a) Keep the maps current and accurate.

(b) Be prepared to brief the commander and visitors on current tactical operational and logistics situations.

(c) Maintain all communications systems.

(d) Ensure all reports required are timely.

(e) Pursue subordinate units reports.

(f) Keep the duty log up-to-date.

(4) Security:

(a) The HHC commander is responsible for the security of the LOC/TOC area.

(b) Security for the LOC/TOC area will be maintained through roving guards. Guards will be posted and a schedule maintained by the HHC commander. This guard will be scheduled over a 24-hour time period. There will be a designated entrance to the LOC/TOC area. This entrance point will be manned by an armed guard who will have an access roster. This roster will be established by the S2/S3 and only those on the list will be given entrance to the LOC/TOC.

(c) The uniform for all personnel in the LOC/TOC area will be established by the S2/S3. The protective mask will be carried at all times and individual weapons will remain with the individuals.

(d) The duty NCO will conduct a sensitive item check at the beginning and end of each shift. Weapons will be physically checked by serial number. All vehicles will be tactically parked. All personnel will be required to ensure that noise and light discipline are strictly maintained.

(e) The LOC/TOC vehicles and tents will be arranged to take maximum advantage of natural cover and concealment. Concealment will be continually improved by camouflage with natural material and nets,

(f) Traffic control in and around the LOC/TOC will be directed through the HHC commander and the guards posted to secure the area.

Appendix F

Support for the Heavy/Light and Infantry Divisions

CONTENTS PAGE

HEAVY/LIGHT DIVISION F-1
INFANTRY DIVISION (NATIONAL GUARD) F-1

HEAVY/LIGHT DIVISION

DIVISION OPERATIONS

The threat to the heavy/light division (2d Infantry Division) relies on massive firepower, large numbers in multiple echelons, and high maneuverability. It may attack with very little warning. The US and its allies must defend against the initial attack, then seize the initiative while using the terrain to maximum advantage.

The US division designed to oppose the threat is a mix of heavy and light forces along with aviation assets. The heavy forces are to be used along roads and in open areas. Aviation assets may be used to insert infantry forces into overwatch positions. The division has only a limited capability for self-sustainment. It is designed to fight as part of a combined command, not a US corps. FM 71-100 describes the operations of the heavy/light division.

DISCOM

The DISCOM structure for this division is designed to support a heavy/light mix without some support normally provided by a corps to a division. The DISCOM is a modified heavy DISCOM with attachments. The HHC/MMC organization and functions are the same as those of the heavy DISCOM. Since there is no COSCOM supporting the DISCOM, the MSB has maintenance teams to provide or supplement repair capability for MLRS, Chapparal, tracked vehicles, artillery/turret/fire control systems, and radios. Supply and missile maintenance capabilities have also been adjusted to meet the force requirements. The AMCO has also been specifically structured to support the mix of aircraft assigned to the division.

The DISCOM has three FSBs. Each is constructed differently to meet the needs of its supported force. The basic support concepts and considerations employed by each FSB are the same as those discussed in this manual and FM 63-20. The support requirements, however, will differ due to differences in terrain and mission, as mentioned above, and the people and equipment of the supported force. Each FSB is designed to support two battalions. One supports two tank battalions, one supports two mechanized infantry, and one supports two infantry. The HHD of each FSB is identical to that of the heavy division FSB HHD.

The FSBs for the tank and mechanized infantry battalions can plan to support as do the FSBs of heavy divisions. The FSB for the infantry battalions support a primarily dismounted force. The decreased mobility and less complex weapon systems reduce logistics requirements, particularly Class III and V and maintenance. Like the units it supports, the FSB must use dispersion and relative mobility in close terrain. FM 7-30 has information on infantry brigade operations.

INFANTRY DIVISION (NATIONAL GUARD)

DIVISION OPERATIONS

The infantry division operates in nearly all terrain, weather, and enemy situations. Since its maneuver elements consist primarily of dismounted infantry, the division is optimized to fight in terrain with restricted mobility. The division's tank and mechanized infantry battalions give the commander flexibility in tailoring the force. He can mix heavy and light forces at the brigade level. Further discussion of infantry division and brigade operations is in FMs 71-100 and 7-30.

DISCOM

The DISCOM of the infantry division is structured the same as the heavy division DISCOM with an HHC/MMC MSB, three FSBs, and an AMCO. However, these units, with exception of the HHC/MMC, have been modified to account for differences in the supported force. The AMCO as well as the S&S, TMT, and missile maintenance companies of the MSB employ the same support principles as the heavy DISCOM, though their organizations have been modified to

account for differences in aircraft, weapon systems, and other equipment in the division.

As in the heavy/light division, each FSB is designed to support a different brigade structure. One FSB supports the two heavy battalions and one infantry battalion. It is structured like a heavy division FSB and operates much the same. It must constantly be prepared to task organize to support brigade task forces which include one or both of its supported brigade's heavy battalions.

The other two FSBs are designed to support brigades whose maneuver battalions are infantry. One is structured to support three battalions and the other four. Their HHDs are identical to those of heavy division FSBs. Their supply companies have a greater capability in the supply section for Class I, II, IV, and VII supply than their counterparts in a heavy division. However, they have less than half the bulk fuel storage and distribution capability since they support dismounted infantry. The medical company ambulance platoons have no tracked ambulances. The maintenance companies are also structured like heavy division FSB companies except that capabilities in specific areas have been adjusted to correspond to the number and types of equipment in the supported force. An infantry SST is allocated for each battalion supported.

Like the heavy/light division FSB designed to support the two infantry battalions, the FSBs of the infantry division support a force built around dismounted infantry soldiers. Class III and V consumption is significantly less than for a heavy brigade, and so is the maintenance requirement. Mobility is limited. FSBs must prepare to support task-organized forces with heavy forces either from within the division or from without.

Glossary

-A-

AB - aviation brigade
acct - account
acft - aircraft
ACofS - Assistant Chief of Staff
ACR - armored cavalry regiment
AC-TCP - analyst console-transportable computer processor
ADA - air defense artillery
ADC - area damage control; assistant division commander
ADC-S - assistant division commander for support
admin - administration; administrative
ADMMO - assistant division materiel management officer
ADP - automatic data processing
ADPE - automatic data processing equipment
ADTMC - algorithm-directed troop medical case
AFSCOORD - assistant fire support coordinator
AG - adjutant general
AHC - assault helicopter company
ALCC - airlift control center
AM - amplitude modulated
amb - ambulance
AMCO - aircraft maintenance company
ammo - ammunition
AO - area of operations
AR - Army regulation
armt - armament
arty - artillery
ASL - authorized stockage list
ASMC - area medical support center
ASP - ammunition supply point
asst - assistant
ATCCS- Army Tactical Command and Control System
ATM - advanced trauma management
ATP - ammunition transfer point
autmv - automotive
auto - automation
avionics - aviation electronics
AVIM - aviation intermediate maintenance
avn - aviation
AVUM - aviation unit maintenance
AXP - ambulance exchange point

-B-

BCOC - base cluster operations center
bde - brigade
BDOC - base defense operations center
bk - book
BMMC - brigade materiel management center
BMO - battalion maintenance officer
bn - battalion
br - branch
BSA - brigade support area
btry - battery

-C-

c - chief
C2 - command and control
C3 - command, control, and communications
CAC - combat aviation company
CAV - cavalry
cbt - combat
CCI - controlled cryptographic items
CCL - combat-configured load
CCS2 - Command, Control, and Subordinate System Structure
cdr - commander
C-E - communications-electronics

CEB - clothing exchange and bath
ch/chap - chaplain
them - chemical
CI - command information
cl - class
clk - clerk
cmd - command
CMMC - corps materiel management center
CNR - combat net radios
co - company
coax - coaxial
COL - colonel
coil - collection
COMALF - commander airlift forces
COMINT - communications intelligence
comm - communication(s)
COMMZ - communications zone
COMSEC - communications security
con - control
CONUS - continental United States
COSCOM - corps support command
CP - command post
CPL - corporal
CPT - captain
CSA - corps storage area
CSG - corps support group
CSH - combat support hospital
CSM - command sergeant major
CSO - command's security objectives
CSR - controlled supply rate
CSS - combat service support
CSSCS - Combat Service Support Control System
ctr - center

-D-

DAAS - defense automatic addressing system
DAG - division artillery group
DAMMS-R - Department of the Army Movements Management System-Redesigned
DAO - division ammunition officer
DAS-3 - Decentralized Automated Service Support System
decon - decontamination
DISCOM - division support command
distr - distribution
div - division
DIVARTY - division artillery
DMMC - division materiel management center
DMMO - division materiel management officer
DMOC - division medical operations center
DMSO - division medical supply officer
DNVT - digital nonsecure voice telephone
doc - document
DODAC - Department of Defense Ammunition Code
DODIC - Department of Defense Identification Code
DS - direct support
DS4 - Direct Support Standard Supply System
DSA - division support area
DSU - direct support unit
DTO - division transportation officer

-E-

ea - each
EAC - echelons above corps
EAD - echelons above division
elct - electronics
EEFI - essential elements of friendly information
elect - electric
ELINT - electronic intelligence
EMP - electromagnetic pulse
EMT - emergency medical treatment
engr - engineer

envrmnt - environment
EOD - explosive ordnance disposal
EPW - enemy prisoner of war
equip - equipment
ETA - estimated time of arrival
evac - evacuation

-F-

FA - field artillery
FARP - forward arming and refueling point
FASCO - forward area support coordination office(r)
FAST - forward area support team
F&E - fuel and electronics
fax - facsimile
fld - field
flt - flight
FLOT - forward line of own troops
FM - field manual; frequency modulated
FPF - final protection fires
FRAGO - fragmentary order
FSB - forward support battalion
FSMC - forward support medical company
fwd - forward

-G-

G1 - Assistant Chief of Staff, G1 (Personnel)
G2 - Assistant Chief of Staff, G2 (Intelligence)
G3 - Assistant Chief of Staff, G3 (Operations and Plans)
G4 - Assistant Chief of Staff, G4 (Logistics)
G5 - Assistant Chief of Staff, G5 (Civil Affairs)
gen - general; generator
GH - general hospital
GRREG - graves registration
GS - general support
GSE - ground support equipment
GSU - general support unit

-H-

hel - helicopter
HEMTT - heavy expanded mobility tactical truck
HET - heavy-equipment transporter
HF - high frequency
HHC - headquarters and headquarters company
HHD - headquarters and headquarters detachment
hldg - holding
HNS - host-nation support
HQ - headquarters
hr - hour(s)
HSS - health service support
HUMINT - human intelligence
hvy - heavy

-I-

IAW -in accordance with
ICR - individually carried record
IG - inspector general
IHFR - improved high frequency radio
IMINT - imagery intelligence
inf - infantry
intel - intelligence
IPB - intelligence preparation of the battlefield
iss - issue

-J-

JFC - joint forces commander
JP-4 - jet propulsion fuel, type 4
JP-5 - jet propulsion fuel, type 5
JP-8 - jet propulsion fuel, type 8

-L-

LASSO - logistics automated system support office
LEN - large extension node
LIC - low-intensity conflict

LID - light infantry division
LO - liaison officer
LOC - lines of communication; logistics operations center
log - logistics
LOGPAC - logistics package
LOS - line-of-sight
LP - listening post
LRP - logistics release point
LRU - line replacement unit
lt - light
LTC - lieutenant colonel

-M-

m - meter(s)
maint - maintenance
MAJ - major
MASH - mobile army surgical hospital
mat - materiel
MCA - movement control agency
MCC - movement control center
MCO - movement control officer
MCP - maintenance collection point
MCS - maneuver control system
MCT - movements control team
MCTNS - man-portable common thermal night sight
mech - mechanized; mechanic
med - medical
MEDBLD - Medical Blood Management
MEDLOG-D - Medical Logistics – Division
MEDPAR-D - Medical Patient Accounting and Reporting — Division
METT-T - mission, enemy, terrain, troops, and time available
mgt - management
MHE - materials handling equipment
MI - military intelligence
MILVAN - military van
MLRS - multiple-launch rocket system
MMC - materiel management center
MOADS - maneuver-oriented ammunition distribution system
MOGAS - motor gasoline
MOPP - mission-oriented protection posture
MOS - military occupation specialty
mov - movement
MP - military police
MRE - meal, ready-to-eat
MSB - main support battalion
MSE - mobile subscriber equipment
MSG - master sergeant
msl - missile
MSR - main supply route
MSRT - mobile subscriber radio-telephone terminal
MST - maintenance support team
MT - maintenance team
MTF - medical treatment facility
MWO - modification work order

-N-

NATO - North Atlantic Treaty Organization
NAI - NATO analog interface
NBC - nuclear, biological, and chemical
NCO - noncommissioned officer
NCS - net control station
NICP - national inventory control point

-O-

obsn - observation
OCOKA - observation, concealment and cover, obstacles, key terrain, and avenues of approach
OCONUS - outside continental United States
ofc - office

off - officer
OP - observation post
OPCON - operational control
OPLAN - operation plan
OPORD - operation order
ops - operations
OPSEC - operations security
opt - optometry
ORF - operational readiness float

-P-

PAD - patient disposition
P&A - personnel and administration
PAO - public affairs office(r)
pat - patient
PC - production control
PCO - peacetime contingency operations
pers - personnel
petri - petroleum
PFC - private first class
PKO - peacekeeping operations
PLL - prescribed load list
plt - platoon
PM - provost marshal
PMO - provost marshal office
POI - plans, operations, intelligence; point of injury
prod - production
prop - property
pt - point
pts - parts
PSS - personnel service support
pwr - power
PX - Army exchange

-Q-

QA/QC - quality assurance/quality control
QSS - quick supply store
qual - quality

-R-

RAG - regimental artillery group
RATT - radio teletypewriter
RAU - radio access unit
rec - receiving
recon - reconnaissance
rep - repair
RMC - remote multiplexer combiner
ROC - rear operations commander
ROWPU - reverse osmosis water purification unit
RP - release point
rpts - repair parts; reports
rqn - requisition
RSR - required supply rate
RTD - return to duty
RTO - radio telephone operator
RX - reparable exchange

-S-

S1 - Adjutant (US Army)
S2 - Intelligence Officer (US Army)
S3 - Operations and Training Officer (US Army)
S4 - Supply Officer (US Army)
SAAS - Standard Army Ammunition System
salv - salvage
SAMS - Standard Army Maintenance System
S&S - supply and service
S&T - supply and transportation
SARSS - Standard Army Retail Supply System
SCC - system control center
SCOTT - single-channel objective tactical terminal
sec - section
SEN - small extension node
SFC - sergeant first class

SGM - sergeant major
sgt - sergeant
shpg - shipping
SHORAD - short-range air defense
SIDPERS - Standard Installation/Division Personnel System
sig - signal
SIGINT - signals intelligence
SIGSEC - signal security
SINCGARS - single-channel ground and airborne radio subsystem
SJA - staff judge advocate
SOP - standing operating procedures
sp - specialist
SPBS-R - Standard Property Book System– Revised
spt - support
sqd - squad
SSB - single side band
SSG - staff sergeant
SST - system support team, single subscriber terminal
sta - station
STAMIS - Standard Army Management Information System
stor - storage
subs - subsistence
sup - supply
supv - supervisor
surg - surgeon; surgical
svc - service(s)
sys - systems

-T-

TA - theater army
TAACOM - theater army area command
tac - tactical
TACCS - Tactical Army Combat Service Support Computer System
TAMCA - Theater Army Movement Control Agency
TAMMIS-D - Theater Army Medical Management Information System- Division
tech - technician, technical
tm - team
TM - technical manual
TMDE - test, measurement, and diagnostic equipment
TMT - transportation motor transport
TOC - tactical operations center
TOW - tube-launched, optically tracked, wire-guided
tp - telephone
trans - transport; transportation
trk - truck
trkd - tracked
trmt - treatment
TRP - traffic regulation point
TSOP - tactical standard operating procedure

-U-

ULC - unit-level computer
ULLS - Unit-Level Logistics System
UMCP - unit maintenance collection point
UMT - unit ministry team
US - United States (of America)
USAF - United States Air Force

-V-

veh - vehicle
VHF - very high frequency
VS - Vulcan/Stinger

-W-

wh - wheeled
whs - warehouse

wpns - weapons
WO - warrant officer
WSM - weapons system manager
WSRO - weapon system replacement operations
wtr - water

-X-

XO - executive officer

References

Army Regulations (ARs)

380-5	Department of the Army Information Security Program
380-380	Automation Security
600-8-1	Army Casualty and Memorial Affairs and Line of Duty Investigations
638-30	Graves Registration Organization and Functions in Support of Major Military Operations
710-2	Supply Policy Below the Wholesale Level
710-3	Asset Transaction Reporting System
735-5	Policies and Procedures for Property Accountability
750-1	Army Materiel Maintenance Policy and Retail Maintenance Operations

Department of the Army Form (DA Form)

2028	Recommended Changes to Publications and Blank Forms
2765-1	Request for Issue or Turn-in

Department of the Army Pamphlets (DA Pams)

738-750	The Army Maintenance Management System (TAMMS)

Field Manuals (FMs)

1-111	Aviation Brigade
1-112	Attack Helicopter Battalion
1-500	Army Aviation Maintenance
3-3	NBC Contamination Avoidance
3-4	NBC Protection
3-5	NBC Decontamination
3-100	NBC Operations
7-30	Infantry, Airborne, and Air Assault Brigade Operations
8-9	NATO Handbook on the Medical Aspects of NBC Defensive Operations
8-10	Health Service Support in a Theater of Operations
8-15	Medical Support in Divisions, Separate Brigades, and the Armored Cavalry Regiment
8-35	Evacuation of the Sick and Wounded
8-55	Planning for Health Service Support
9-6	Munitions Support in Theater of Operations
10-14	Unit Supply Operations

10-27	General Supply in a Theater of Operations
10-52	Field Water Supply
10-63	Handling of Deceased Personnel in Theaters of Operations
10-63-1	Graves Registration Handbook
10-67	Petroleum Supply in Theater of Operations
10-68	Aircraft Refueling
10-69	Petroleum Supply Point Equipment and Operations
10-71	Petroleum Tank Vehicle Operations
10-72	Petroleum Surveillance: Laboratories and Kits
10-280	Mobile Field Laundry, Clothing Exchange, and Bath Operations
12-6	Personnel Doctrine
16-5	The Chaplain and Chaplain Assistant in Combat Operations
19-1	Military Police Support for the AirLand Battle
19-30	Physical Security
20-22	Vehicle Recovery Operations
21-10	Field Hygiene and Sanitation
21-10-1	Unit Field Sanitation Team
21-11	First Aid for Soldiers
29-114	Field Service Company General Support, Forward
34-130	Intelligence Preparation of the Battlefield
43-5	Unit Maintenance Operations
43-12	Division Maintenance Operations
55-2	Division Transportation Operations
55-30	Army Motor Transport Units and Operations
63-20	Forward Support Battalion
63-21	Main Support Battalion
63-3J	Combat Service Support Operations-Corps
71-3	Armored and Mechanized Infantry Brigade
71-100	Division Operations
100-5	Operations
100-10	Combat Service Support
100-20	Low Intensity Conflict
100-27	US Army/Us Air Force Doctrine for Joint Airborne and Tactical Airlift Operations
100-37	Terrorism Counteraction
101-5	Staff Organization and Operations
101-10-1/2	Staff Officers' Field Manual – Organizational, Technical, and Logistical Data Planning Factors

Standard Form (SF)

153 COMSEC Material Report

Technical Manuals (TMs)

8-215 Nuclear Handbook for Medical Service Personnel

8-285 Treatment of Chemical Agent Casualties and Conventional Military Chemical Injuries

Index

Aircraft maintenance company, 1-4, 2-4, 2-5, 8-3, 8-5
Airdrop support, 9-4
Airlift support, 9-4
Ammunition supply point operations, 6-5
Ammunition transfer points, 3-4, 6-4
Area damage control, A-8
Arming the force, 6-1, B-5, C-2
Authorized stockage lists, 3-3
Automated systems, 2-6
Automation systems security, 4-17
Aviation brigade, 2-2
Aviation fuel support, 7-4

Base clusters, A-7
Bases, A-6
Brigade support area, 1-4, 1-5
Bulk ground fuel support, 7-4

Class I supply branch, 3-3
Class II-IV supply branch, 3-3
Class III and water supply branch, 3-4
Class IV/barrier materials, 6-5
Class V,
Support organization, 6-1
Support operations, 6-1
Class VII/weapon systems distribution, 8-11
Clothing and Class II support, 5-10
Combat configured loads, 6-4
Combat net radio system, 4-10
Combat service support control system, 2-6
Combatting terrorism, D-1
Command and control, 2-1, C-1
Common repair parts distribution, 8-9
Communications, 4-1
COMSEC, 4-14
Controlled supply rates, 3-4
Corps, 2-4
Countering nuclear weapons or chemical/biological agents, B-2
Current area system, 4-1, 4-2

Defense operations, A-7
Deployment of DISCOM elements, 1-4
DISCOM,
Sustainment mission, 1-1
Sustainment organization, 1-3
Command and control, 2-1
Operations in LIC, D-1
Command Post, 2-8
HHC/MMC radio nets, 4-10
DISCOM organization and functions, 2-10
Commander, 1-1, 2-10
Executive officer, 2-12
S1 section, 2-12
S2/S3 section, 2-12
Plans/intelligence branch, 2-12
Support operations branch, 2-13
Communications branch, 2-13
S4 section, 2-14
Headquarters company, 2-14
DISCOM maintenance organizations, 8-1, 8-2
Division ammunition officer, 2-3, 3-4, 6-1
Division artillery, 2-3
Division commander and staff, 2-1
Division material management center, 1-1, 1-4, 3-1, 3-2, 8-1
Division medical operations center, 2-14, 5-3
Division support area, 1-6, 1-7
Division surgeon, 5-2
DSA movement, A-3

Echelons I and II health services, 1-1, 1-5

Echelon II, division-level HHS, 5-1
Evacuation, 8-7

Fixing the force, 8-1, B-5, C-3
Forward support battalion, 1-4, 2-2, 2-4, 2-5, 2-6
Fuel forecasting, 7-1
Fuel organization, 7-1
Fueling the force, 7-1, B-5, C-2
Functional logistics support systems, 2-7
SIDPERS 2-7
SPBS-R, 2-7
ULLS, 2-7
SARSS, 2-7
SAMS, 2-7
SAAS-DAO, 2-8
DAMMS-R, 2-8
TAMMIS-D, 2-8

Graves registration, 5-18

Health service support, 5-1
Self-aid and buddy-aid, 5-1
Combat lifesaver, 5-1
Combat medic, 5-1
Treatment squad, 5-1
Heavy/light division, F-1
Heavy/light operations, C-1
Heavy/light mixes, C-1
HHC/MMC relationships, 2-1

Infantry division (National Guard), F-1

Laundry and renovation, 5-19
LIC support structure, D-1
Logistics automation systems support office, 3-1

Main support battalion, 1-4, 2-2, 2-4, 2-5, 2-6, 8-1
Maintenance,
FSB maintenance company, 8-6
Heavy maintenance company, 8-3, 8-4
Light maintenance company, 8-1, 8-2
Aircraft maintenance company, 8-3, 8-5
Maneuver brigade, 2-1
Maps, 5-15
Medical company,
FSB, 5-4, 5-6
MSB, 5-4, 5-5
Medical evacuation, 5-7, 5-8
Medical supply operations, 5-4
Missile support company, 8-3, 8-4
MOADS, 6-1
Mobile subscriber equipment, 4-3
Modular medical support system, 5-1
Motor transportation organization, 9-1
Movement control, 9-1
Movements, A-2
Moving the force, 9-1, B-6

NBC considerations, B-1
NBC planning, B-1
Night and limited visibility operations, 1-10

OPSEC, 4-16

Packaged products support, 7-4
Peacekeeping operations, D-2
Peacetime contingency operations, D-2
Personal welfare and comfort items, 5-15
Phases of offensive operations, 1-7
Potential threat, 4-16
Principles and developments in communications systems, 4-1
Property book-Class VII section, 3-5
Purpose of the offense, 1-7

Rear operations,
Objectives, A-1
Considerations, A-1
Recovery and evacuation, 8-7
Repair parts distribution system for the aviation brigade, 8-11
Required supply rate, 3-4

Security operations, A-5
Soldier field service support, 5-15
Soldier supply support, 5-7
Subsistence support, 5-7
Support differences, C-1
Supported division units, 2-1
Support for insurgency and counterinsurgency, D-1
Support to the heavy/light and infantry divisions, F-1
Support to specific mixes, C-4
Heavy brigade to a light division, C-5
Heavy battalion to a light brigade, C-6
Light brigade to a heavy division, C-6
Light battalion to a heavy brigade, C-7
Sustaining,
The offense, 1-7
The defense, 1-9
The deep attack, 1-9
Retrograde operations, 1-10
The soldier, 5-1, C-4
Sustainment,
Planning, 1-2
Considerations, 1-8
Imperatives, 1-2

Terrain management, A-4
Throughput support, 9-3
Transportation motor transport company, 9-1, 9-2
Transportation operations, 9-1, 9-2

Water support, 5-10
Weapon systems manager, 3-7

By Order of the Secretary of the Army:

CARL E. VUONO
General, United States Army
Chief ot Staff

Official:

PATRICIA P. HICKERSON
Colonel, United States Army
The Adjutant General

DISTRIBUTION:

Active Army USAR, and ARNG: To be distributed in accordance with DA Form 12-11E, requirements for FM 63-2, Division Support Command, Armored, Infantry, and Mechanized Infantry Divisions (Qty rqr block no. 0502)

*U.S. Government Printing Office 1992 — 311-831/61267

PIN: 054396-000